OCALA Electric Utility

It's On!

**Electric Engineering Division**

# RESIDENTIAL CONDUIT RULES AND REGULATION

City of Ocala
Utility Services

1805 NE 30TH AVE., BLDG. 400
Ocala, FL 34470-4875
Phone: (352) 351-6620
Fax: (352) 401-6961

**Electric Engineering Division**

Dear Developer:

Over the next few months, the City of Ocala Utility Services (OUS) will be working closely with you and your contractors to install the electrical conduit system for your project. We in the Electric Engineering Division are looking forward to working with your contractors and want the installation to proceed as smooth as possible.

Attached, please find the City of Ocala Residential Conduit Rules and Regulations for use by your electrical conduit contractor. If the contractor has any questions that are not addressed in this guide, please contact the City representative responsible for the project.

Respectfully
Ocala Utility Services
Engineering Division

**TABLE OF CONTENTS**


i. LETTER TO DEVELOPER ..... 2

I. RULES AND REGULATIONS

A. TABLE OF CONTENTS ..... 3

B. TERMS AND DEFINITIONS ..... 4

C. DEVELOPER'S RESPONSIBILITIES ..... 6

D. TRENCH SPECIFICATIONS AND PROCEDURES ..... 7

E. REQUIREMENTS FOR JOINT USE OF TRENCH ..... 8

F. CONDUIT SPECIFICATIONS ..... 9

G. CONDUIT PROCEDURES

1. Raceways ..... 10
2. Riser Stub-ups ..... 11
3. Transformer Locations ..... 11
4. Primary Cabinet Locations ..... 11

H. SUMMARY ..... 12

I. SYMBOLS ..... 13

J. EXHIBITS

1. Secondary/Service Riser Stub-up Installation - Exhibit 1R ..... 14
2. Concrete Encasement and Bridge Placement - Exhibit 2 ..... 15
3. Typical Trench Line with Respect to R.O.W. - Exhibit 3 ..... 16
4. Typical 1-phase Transformer Location - Exhibit 4R ..... 17
5. Typical 1-phase Primary Cabinet Location - Exhibit 5 ..... 18
6. Typical 3-phase Primary Cabinet Stub-up - Exhibit 6 ..... 19
7. Typical Stub-up Termination Point - Exhibit 7 ..... 20
8. Transformer Placement in Easement - Exhibit 8 ..... 21
9. Warning Tape Placement - Exhibit 9 ..... 22
10. Conduit Clearances-Joint Use Trench - Exhibit 10 ..... 23
11. Minimum Vertical Clearance at Crossings - Exhibit 11 ..... 24
12. Minimum Horizontal Clearance Around Equipment - Exhibit 12 ..... 25
13. Primary Riser Stub-up – Exhibit 14 ..... 26
14. Secondary Vault Stub-up – Exhibit 15 ..... 27
15. Service Conduit Stub-out at Transformer – Exhibit 17 ..... 28
16. Temporary Construction Service Installation – Exhibit 18 ..... 29
17. Multiple Conduits in Trench – Exhibit 19 ..... 30
18. Directional Bore Conversion- Exhibit 20 ..... 31
19. Meter Socket Spacing Requirements – Exhibit 21R ..... 32
20. Unacceptable Combination Meter Can ..... 33
21. Examples and Diagrams of Service Conduit Installations ..... 34 - 36

K. SUPPLEMENTAL SHEETS (Site specific and provided by OUS)

## TERMS AND DEFINITIONS

| | |
|---|---|
| **Conduit System:** | Any combination of duct, conduits, cabinets and vaults joined to form an integrated whole. |
| **Conduit Stub-up:** | Any vertical length of conduit that allows above ground access to an underground electrical conduit raceway. |
| **Developer:** | Architect, engineer, electrician, owner, or contractor responsible for the installation of the electric facilities. |
| **Utility Easement:** | A legal document giving the Utility limited use of private property to provide electric service. |
| **Ells:** | Heavy wall rigid Schedule 40 PVC conduit elbow; gray in color; Electrical grade, radius according to size: 2”, 3”, 4” diameter = 24” radius; 6” diameter = 36” radius. |
| **Final Grade:** | The grade at the time of completion of the site including all buildings. |
| **Overhead Construction:** | The standard placement of electric distribution lines on wood, metal, composite or concrete poles above ground. |
| **Point of Service:** | The point within a parcel of property that is determined the closest and most reasonable for Ocala Utility Services to provide electric service. Typically where OUS facilities end and the customer’s begin. |
| **Primary Cable:** | Electrical cable used for the purpose of transmitting high voltage (above one thousand volts) from one point to another. |
| **Primary Riser:** | Any vertical length of conduit used to transition overhead primary to underground primary. |
| **Primary Cabinet:** | An above ground metal enclosure, used by the utility for joining primary electrical cables. |
| **Primary Conduit:** | Conduit intended for use with primary cable. |
| **Raceway:** | An enclosed channel designed expressly for holding wire or cables. A conduit is a raceway, so is a duct. |
| **Right-of-way:** | A strip of land occupied or intended to be occupied by a road, crosswalk, railroad, electric power line, oil or gas pipeline, water main, sanitary or storm sewer main, or for similar use. |
| **Riser Stub-up:** | A vertical length of conduit installed above ell at pole or stub-up location. |

| | |
|---|---|
| **Secondary Cabinet:** | Junction point to terminate secondary conductor. Above ground cabinet usually contains Utility cable and customer cable within the same enclosure. |
| **Secondary Cable:** | Electrical cable used for the purpose of transmitting low voltage (600 volt cable) from one point to another. |
| **Secondary Riser:** | Any vertical length of conduit used to transition overhead secondary to underground secondary. |
| **Secondary Vault:** | A below ground fiberglass enclosure, used for joining secondary electrical cables. |
| **Service Wire:** | Cable between OUS Electric facilities and meter pedestals or meters. |
| **Secondary/Service Conduit:** | Conduit intended for use with secondary or service cable. Raceway between OUS facilities and the customer's meter. |
| **Sweep:** | A gradual curve of the conduit raceway used to change direction of the conduit run. |
| **Transformer:** | Electrical device used for converting voltage levels. |
| **Transformer Pad:** | A ground mounted platform used to support a transformer. |
| **Underground Construction:** | The placement of electric primary and/or secondary cable and conduit below final grade. |
| **Warning Tape:** | Six (6) inch wide red warning tape installed in all trenches above conduit system at twelve (12) inches below final grade. |

## DEVELOPERS RESPONSIBILITIES

1. Installation of the underground electric conduit system shall not begin until the contractor is issued prints stamped "**APPROVED FOR CONSTRUCTION**" and initialed by the Engineer assigned to the project. Any print(s) that are unstamped or stamped "preliminary" cannot be used for construction. Field changes to the conduit design must be approved by OUS in writing.

2. Construction site must be within six (6) inches of final grade or the Developer must provide elevations for the conduit route before any conduit installation may begin.

3. The conduit system must be inspected by an authorized OUS inspector, Electric Engineering Division, 351-6620 prior to closing the trench. Failure to comply will result in re-opening of the trench at Developer's expense.

4. The Developer will be responsible for staking all electrical cable routes, cabinets, vaults and transformer locations as indicated in the approved construction drawings supplied by OUS. Any relocation needed after the conduit is installed will be at the Developer's expense.

5. The Developer shall be responsible for supplying property markers, right-of-way markers, radius of curvature markers, sidewalk markers, and curb markers as needed for the electrical conduit installation before, during and after construction.

6. The Developer shall be held responsible and liable for the electrical conduit system until OUS Electric Engineering Division accepts it. The conduit installed will be officially accepted when OUS successfully installs cable in the conduit system. All as-built drawings must be submitted to the Electric Engineering Division prior to final acceptance.

7. The Developer shall be responsible to ensure that shrubs, plants, and structures are kept nine (9) feet from the front side of padmount transformers, and three (3) feet from the other sides. OUS reserves the right to remove any obstructions without notice to the owner if any deviations from this standard are encountered in the field. (SEE EXHIBIT 12).

8. City, County or State Road Permits and Railroad Permits will be obtained by OUS as necessary. No construction can be started until all applicable approved permits are received.

9. If a temporary construction service is required the meter post will be installed at the right side rear of the transformer or the rear of the secondary vault. (SEE EXHIBIT 18)

10. The Developer shall provide service conduit and conductor from the meter can to the secondary vault or pad-mounted transformer.

**These specifications reflect minimum requirements and OUS reserves the right to alter or impose more stringent requirements as necessary for good engineering design.**

## TRENCH SPECIFICATIONS AND PROCEDURES

1. All primary and secondary conduits shall utilize the same trench whenever possible.

2. **Depth:** All trenches must be level and dug to allow thirty-six (36) inches of fill from the top of the conduit to final grade.

3. **Width:** All trenches must be a minimum of six (6) inches in width. If more than one conduit is being installed in a trench, no stacking of conduits is permitted. All conduits must lay flat in the trench. (SEE EXHIBIT 19)

4. After the Electric Engineering Division has inspected and approved the conduit within an opened trench, the trench must then be backfilled with soil free from any debris. This backfill soil must be on site and inspected prior to use for backfilling.

5. The Developer shall be responsible for the disposal of any foreign materials that are removed from any trench.

6. The Developer shall be responsible for any and all compaction (if needed) within the road right-of-way and on private property. This includes all landscaping and swale reconstruction.

7. Whenever applicable, trenching and backfilling including compaction will conform to City, County, or State jurisdictions. Where trench crosses present or future pavement or roadways, compaction and density testing may be required to conform to article 125-8.3 of the Florida Department of Transportation Specifications for Road and Bridge Construction.

8. The Developer shall supply and install underground warning tape directly above the conduit in all trenches and at a depth of twelve (12) inches below final grade. (SEE EXHIBIT 9)

## REQUIREMENTS FOR JOINT USE OF TRENCH

For other utilities wanting to utilize the same trench with OUS, the following guidelines and requirements must be followed:

a) Two (2) foreign utilities, telephone and cable TV, are permitted (with a joint use agreement) to utilize an electric trench. When either of these utilities wants to utilize the same trench, each utility must maintain a minimum vertical clearance of twelve (12) inches separating the electric cable from the other utility and a horizontal clearance of eighteen (18) inches. (SEE EXHIBIT 10)

b) Water, Gas and Sewer are not permitted to utilize an electric trench except for coincidental crossings that may occur. In this event there must be a minimum of twelve (12) inch vertical clearance separating the electric cable from the other utility (SEE EXHIBIT 11)

## CONDUIT SPECIFICATIONS

1. Size and type of conduit and ells will be specified on construction print(s).

2. When not in a loop system, all primary and secondary conduit runs for residential applications shall include a spare conduit only for the length that is inaccessible, for example, lengthwise under driveways, or under other objects that would not allow normal trenching or digging to replace conduit in the future.

3. **All conduits** shall be SCH 80 or SCH 40 rigid PVC conduit electrical grade; NEMA TC-2 specification; UL approved; rated for 90 degree C cable; furnished with coupling or integral long bell; gray in color; underground applications.

4. **Conduit couplings** shall be "long line" type.

5. **Primary/Secondary/Service/Lighting risers** shall be schedule 80 PVC conduit and are the responsibility of OUS.

6. **Primary/Secondary/Service/Lighting Riser Pole Stub-ups** shall be schedule 80.

7. **Ells** used in primary, secondary, or service conduit systems are 90 degree, schedule 40 PVC, and twenty-four (24) inch radius, (6" conduit requires thirty-six (36) inch radius) unless otherwise specified.

8. **Lighting Ells** shall be one (1) inch, 90 degree, schedule 40 PVC, twelve (12) inch radius, unless otherwise specified.

9. **C.T. metering ells** shall be one (1) inch, 90 degree, schedule 40 PVC, 12 inch radius.

10. **C.T. metering conduit** shall be one (1) inch schedule 40 PVC. Maximum length from the transformer pad to metering equipment to be twenty-five (25) feet.

11. **Primary Conduit raceways** shall be schedule 40 PVC conduit.

12. **Secondary Conduit raceways**, from transformer to secondary cabinet, shall be schedule 40 PVC conduit.

13. **Lighting conduit raceways** shall be one (1) inch, schedule 40 PVC conduit, unless otherwise specified.

14. **Primary, Secondary, Service, and lighting stub-ups** shall be schedule 80 PVC conduit at the base of OUS pole and shall be schedule 40 PVC at any other location.

# CONDUIT PROCEDURES

**Raceways:**

1. Primary conduit run shall not have more than three (3) bends within the run regardless of whether the bend is constructed from a 90 degree or 45 degree ell. This includes the ells for stub-ups.

2. Field bending of conduit, by heating, is not permitted.

3. Any conduit that passes under pavement may be encased in concrete with a minimum of six (6) inches of concrete on top and bottom, and three (3) inches on both sides. (SEE EXHIBIT 2) Installation of concrete is not a normal construction practice. Conduit supports must be installed every five (5) feet and the conduit must be secured in a manner that will prevent the conduit from floating during the installation of the concrete.

4. Conduit shall be installed in straight lines and remain level at all times. Sweeps shall not be used unless specified on the construction print. If more than one conduit is being installed, the placement of conduits must be installed in a horizontal, side by side configuration. (SEE EXHIBIT 19)

5. **Depths :** Primary and secondary conduit - minimum thirty-six (36) inches (to the top of the conduit) below final grade. (SEE EXHIBIT 4C)

6. A continuous length of polypropylene 200 pound pull line shall be installed in each conduit with an excess of ten (10) feet secured at each end. (Spare riser conduits shall have thirty (30) feet of excess length of nylon pull string for future use). The cord shall be installed after the conduit is glued together and all joints are cured to prevent the cord from sticking to the conduit.

7. Open ends of all conduits shall be covered or sealed with duct tape applied at double thickness. The tape shall cover the entire opening and all exposed string to prevent entry of water and other foreign materials. This also includes unfinished conduit runs left in a trench at the end of each workday. (SEE EXHIBIT 7)

8. All conduit runs shall be marked at the top of the stub-up with the same identification number as the first up-line or down-line electrical device to identify ends of conduit runs. Marks shall be made with a permanent marking pen, black in color. Identification numbers are indicated on the construction print with an alphanumeric character (for example: F1123). Any questions should be referred to the OUS representative responsible for the project.

9. PVC cleaner and cement shall be applied to all conduit joints in accordance with the manufacturer's specifications.

10. The raceway(s) are to be clear of any obstructions. The utility will pull a steel mandrel through the raceway to verify proper installation. The contractor must correct any obstructions encountered.

**Riser Stub-ups:**

1. Riser stub-up at OUS pole shall consist of ninety (90) degree schedule 40 PVC ell at the bottom of the trench with a schedule 80 stub-up that is to extend a minimum two (2) feet above finish grade. Contractor shall supply and install this stub-up. (SEE EXHIBIT 1C, Secondary, and EXHIBIT 14, Primary)

2. Riser stub-up conduits shall be installed on the side of the pole opposite oncoming traffic or the field side of pole.

3. Primary, secondary and service riser conduits shall be installed by OUS to the conduit stub-up installed by the contractor.

**Transformer Locations:**

1. All conduits shall be stubbed up and capped at a minimum of four (4) feet above final grade at all transformer locations.

2. There shall be a seven (7) inch minimum separation between the primary and secondary conduit for single-phase transformer locations. (SEE EXHIBIT 4C)

3. There shall be an eight (8) inch minimum separation between the primary and secondary conduits for all three-phase transformer location, unless otherwise specified on transformer pad drawing. (SEE EXHIBIT 4C)

4. Construct three-phase transformer/secondary cabinet concrete pad. Concrete to be 3000 PSI at twenty-eight (28) days.

5. Number 3 reinforcing rods to be installed twelve (12) inches center. Dimensions of pad are site-specific and are to be supplied by OUS. Pad forms are to be inspected prior to pouring concrete.

6. Stub-ups at transformer locations shall be schedule 40 PVC.

**Primary Cabinet Locations:**

1. Conduit stub-ups at all single-phase primary cabinet locations shall be grouped together with one (1) inch of separation between each conduit. The conduit shall be stubbed up and capped at a minimum of four (4) feet above final grade. Conduit configuration shall not exceed twelve (12) inches in width and fifteen (15) inches in length. (SEE EXHIBIT 5)

2. Conduit stub-ups at all two (2) and three (3) phase cabinet locations shall be grouped in phases. Same phase conduits shall have one (1) inch of separation between each conduit and six (6) inches shall separate the phases. The conduit shall be stubbed up and capped at a minimum of four (4) feet above final grade. Conduit configuration shall not exceed twelve (12) inches in width and fifty (50) inches length. (SEE EXHIBIT 6)

3. Stub-ups at primary cabinet locations shall be schedule 40 PVC.

# SUMMARY

**WORK TO BE PERFORMED AND MATERIAL TO BE FURNISHED BY THE DEVELOPER:**

1. Open and close all trenches as required by the work order.

2. Furnish and install all conduits as required by the work order.

3. Provide a pull line in the conduit for use by OUS.

4. Supply and install warning tape above all conduit runs.

5. Construct concrete transformer/secondary cabinet pad per work order specifications.

6. Install secondary to transformer, secondary cabinet, or secondary vault as required.

**WORK TO BE PERFORMED AND MATERIAL TO BE FURNISHED BY THE OUS:**

1. Furnish and install distribution transformers.

2. Furnish and install all primary cabinets and secondary vaults.

3. Furnish, and install primary (high voltage) conductors.

4. Provide all construction prints needed for the electrical conduit installation.

5. Furnish, and install all secondary conductors from the transformer to the secondary cabinets, if specified.

6. Perform regular inspections of the conduit system as it is being installed.

7. Furnish and install all riser conduits.

# Electric Work Order Symbol Legend

## Distribution Transformer

▲ Distribution Transformer

## Fuses

S Overhead Expulsion

Underground Expulsion

## Flying Tap

Flying Tap

## Switches

Manual Hook Stick Disconnect

Gang Operated ABGO Load Break

Single Phase Oil Switch

Underground Disconnect

Underground Load Break

## Capacitor Bank

Fixed Bank

Switched Bank

## Recloser

R Recloser

## Sectionalizer

S Sectionalizer

## Voltage Regulator Bank

Voltage Regulator Bank

## Surge Arrester

Surge Arrester

## Light

Light

## Span Guy

Span Guy

## Anchor Guy

Sidewalk

Standard

## Overhead Primary Cable

Single Phase (1 Dash)

Two Phase (2 Dashes)

Three Phase (3 Dashes)

## Underground Primary Cable

Single Phase (1 Dot)

Two Phase (2 Dots)

Three Phase (3 Dots)

## Overhead Secondary Cable

Overhead Secondary Cable

## Underground Secondary Cable

Underground Secondary Cable

## Transmission Cable

OH Transmission

UG Transmission

## Poles

Pole

## Riser

Riser

## Pad Structure

Pad

Transclosure

## Underground Vaults

SL Street Light Vault

SV Secondary Vault

V Primary Termination Vault

PB Primary Pullbox

## Pad Mounted Gear Cabinet

F Fuse Cabinet

S Switch Cabinet

V Termination Cabinet

SC Secondary Cabinet

## Work Location

Work Location

## Work Request Polygon

None

Initiated

In Design

In Construction

Complete

## Conduit

Transmission

Primary

Secondary

Light

Fiber

## Network Junctions

Network Junctions

## Electric Service Location

All Other Meters

T Temp Pole Meter

## Open Point

OP OH Open Point (DDE)

OP UG Open Point

## Work Order Colors

Existing Features

Install Features

Remove Features

Leave Features

Replace Features

Transfer Install

Transfer Remove

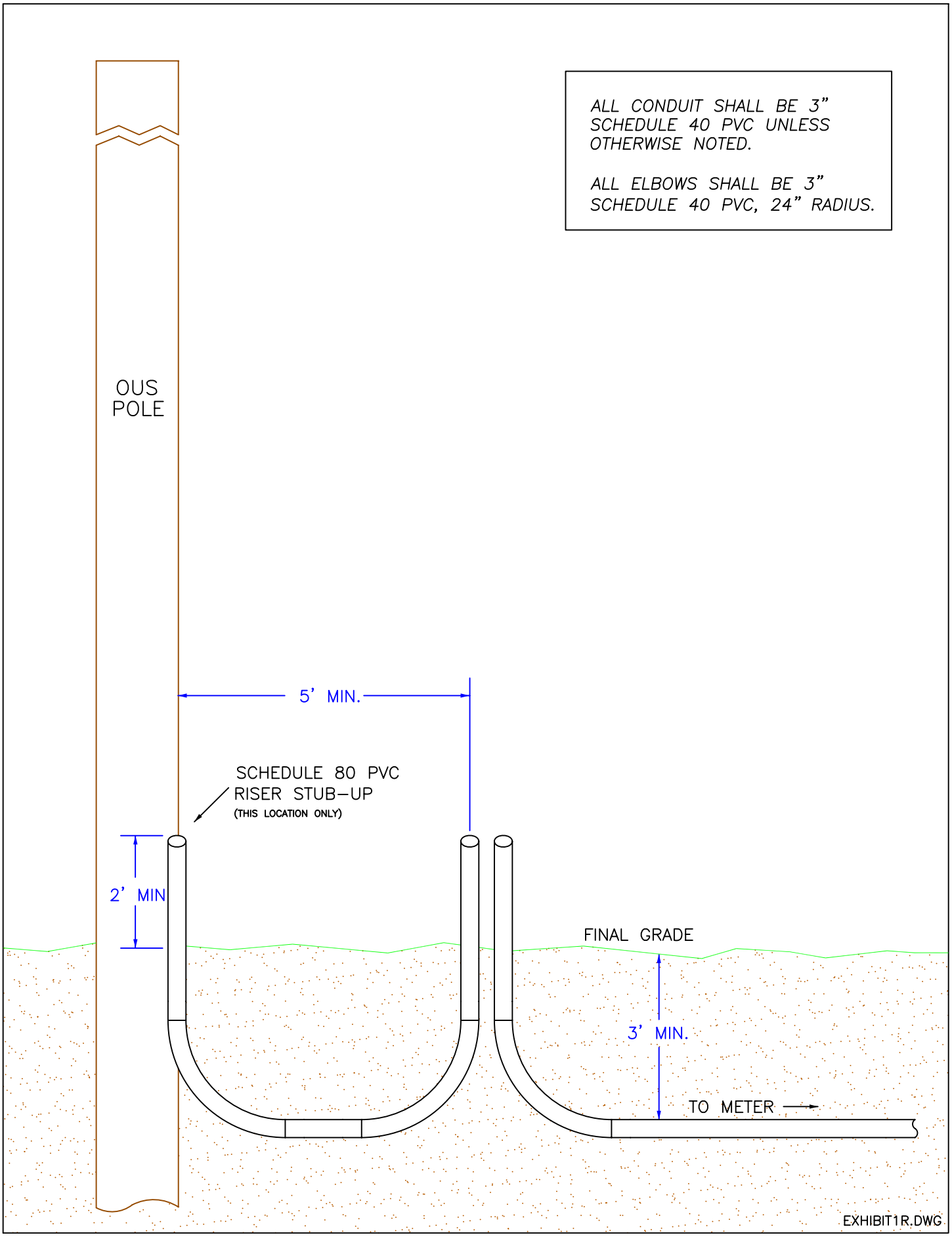


SECONDARY/SERVICE RISER STUB-UP INSTALLATION (RESIDENTIAL)

EXHIBIT 1R

ISS 1-30-06, REV 10-27-09

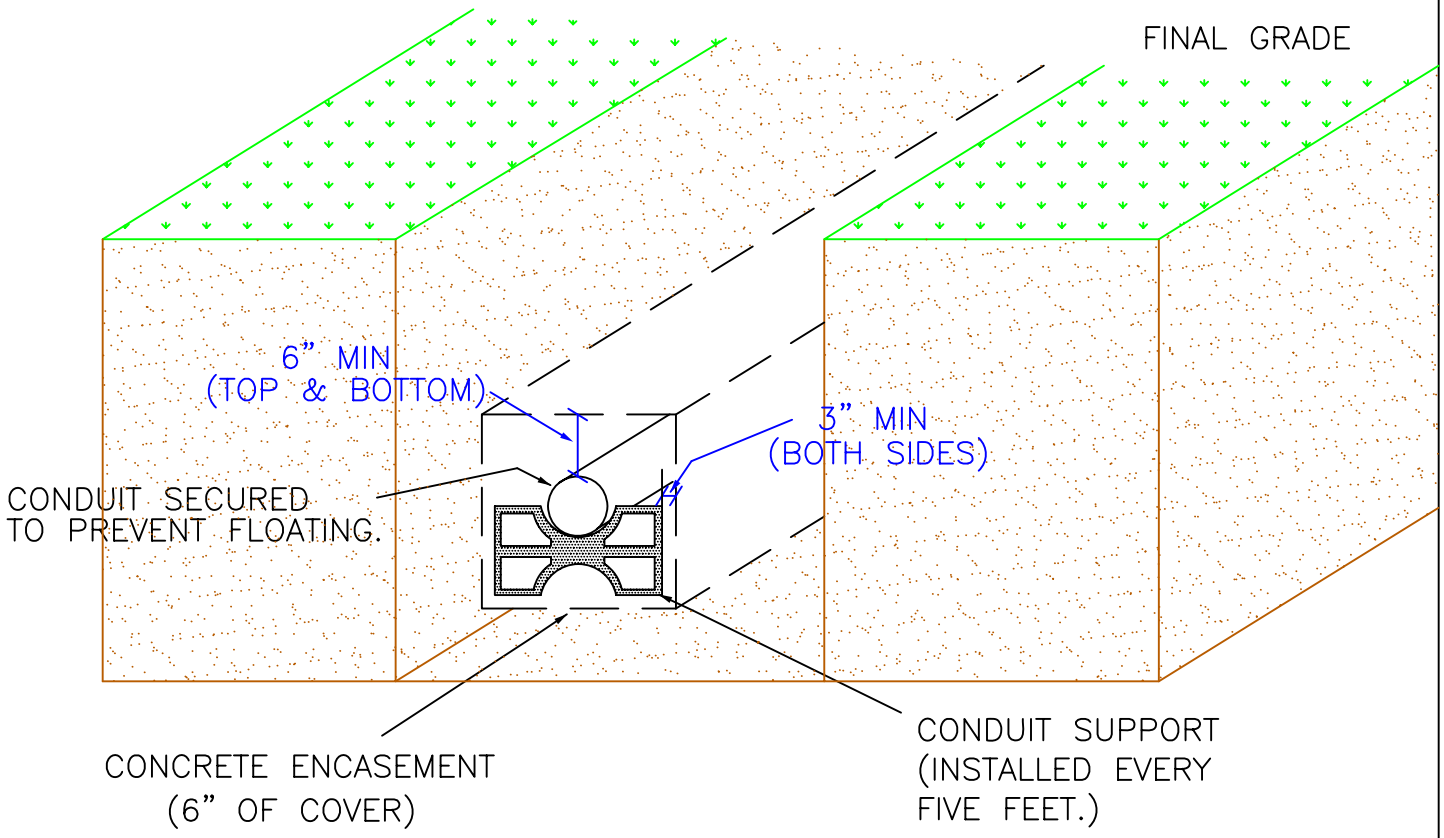


NOTE: CONDUIT DEPTH IS TYPICALLY 36" BELOW FINAL GRADE.

EXHIBIT2.DWG

CONCRETE ENCASEMENT
AND SUPPORT PLACEMENT

EXHIBIT 2

ISS 3-13-03, REV 10-27-09

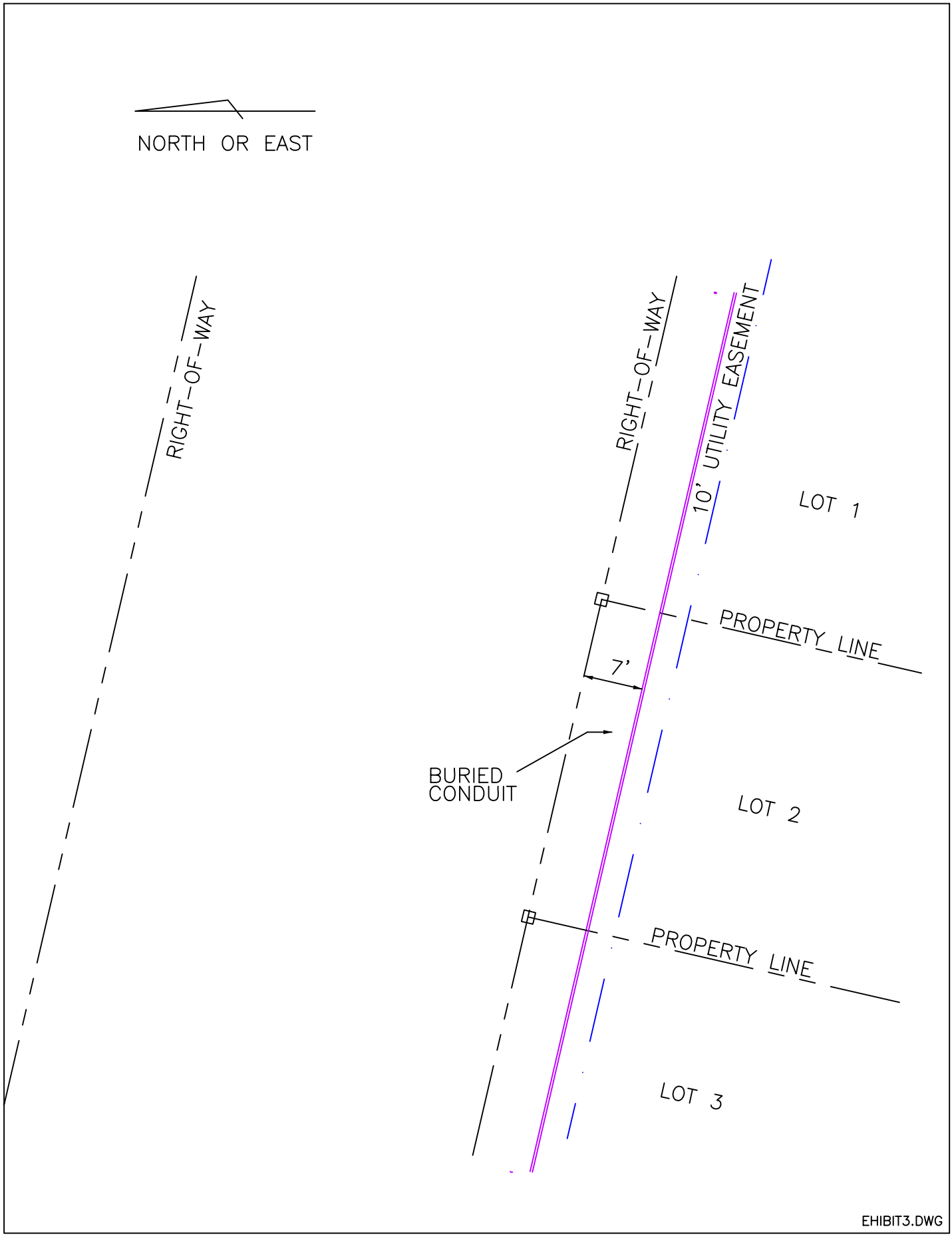


TYPICAL TRENCH LINE WITH RESPECT TO RIGHT-OF-WAY

EXHIBIT 3

ISS 3-13-03, REV 10-23-09

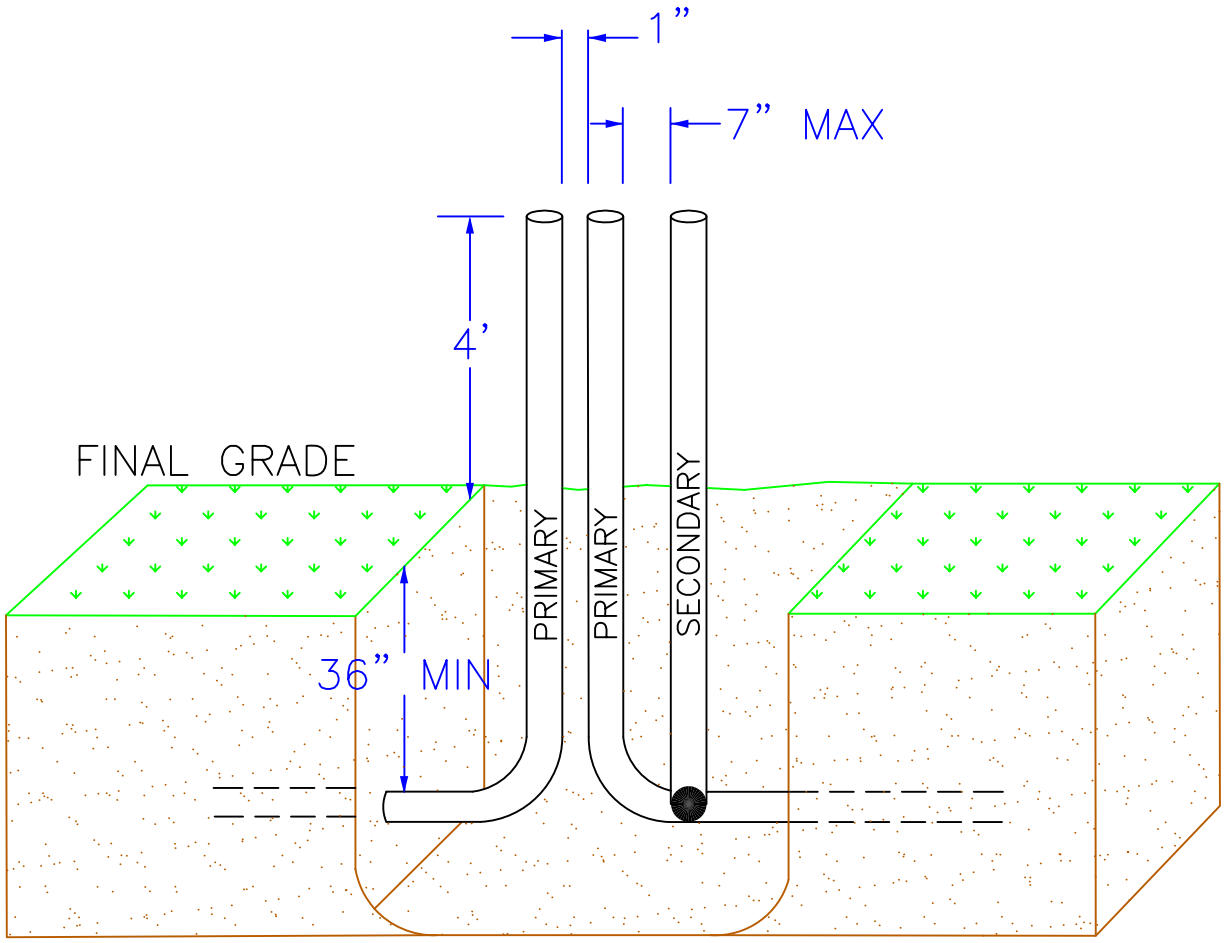


EXHIBIT4R.DWG

TYPICAL SINGLE–PHASE TRANSFORMER LOCATION

EXHIBIT 4R

ISS 3–13–03, REV 10–26–09

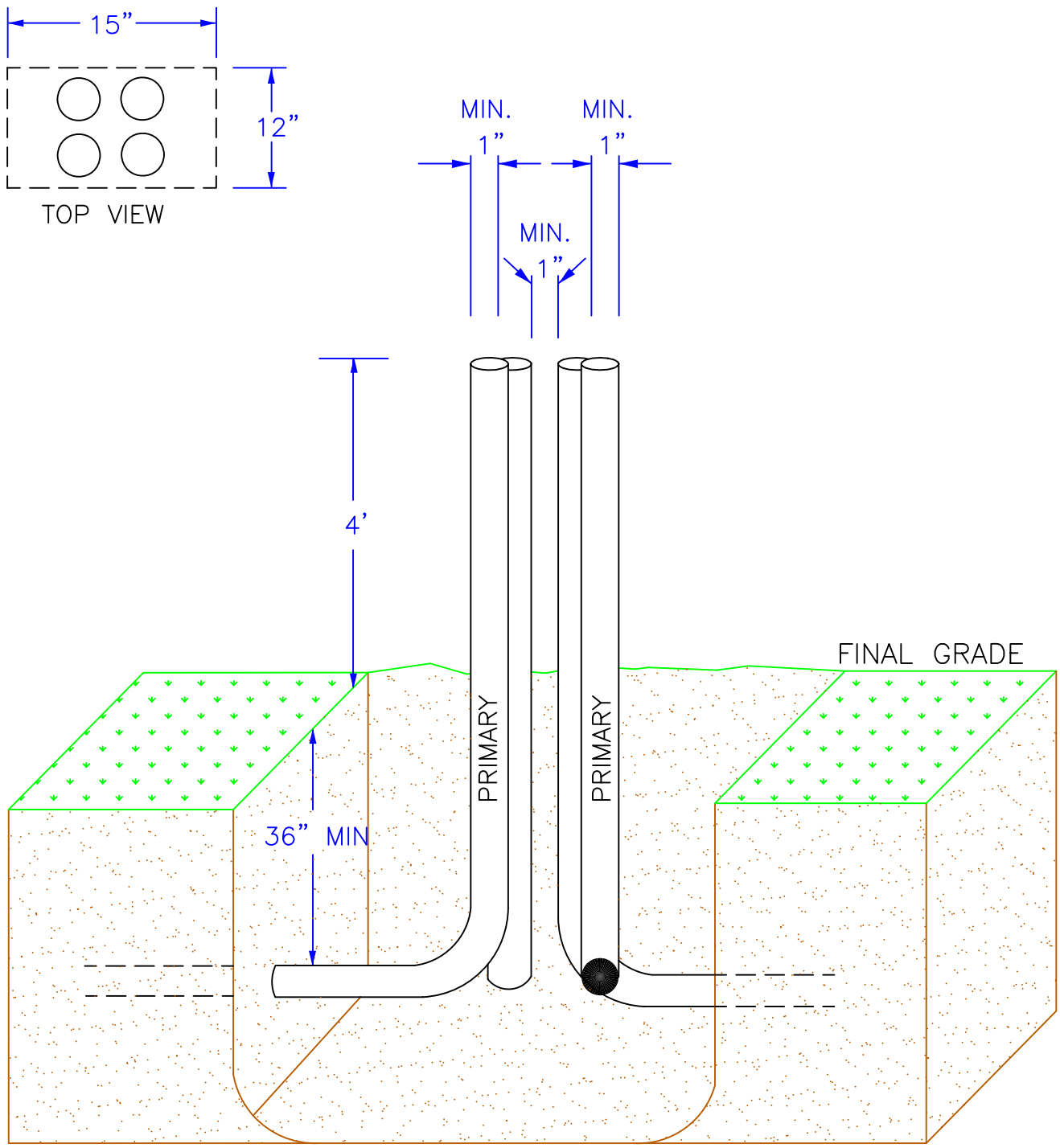


EXHIBIT5.DWG

TYPICAL SINGLE–PHASE
PRIMARY CABINET LOCATION

EXHIBIT 5

ISS 3–13–03, REV 10–22–09

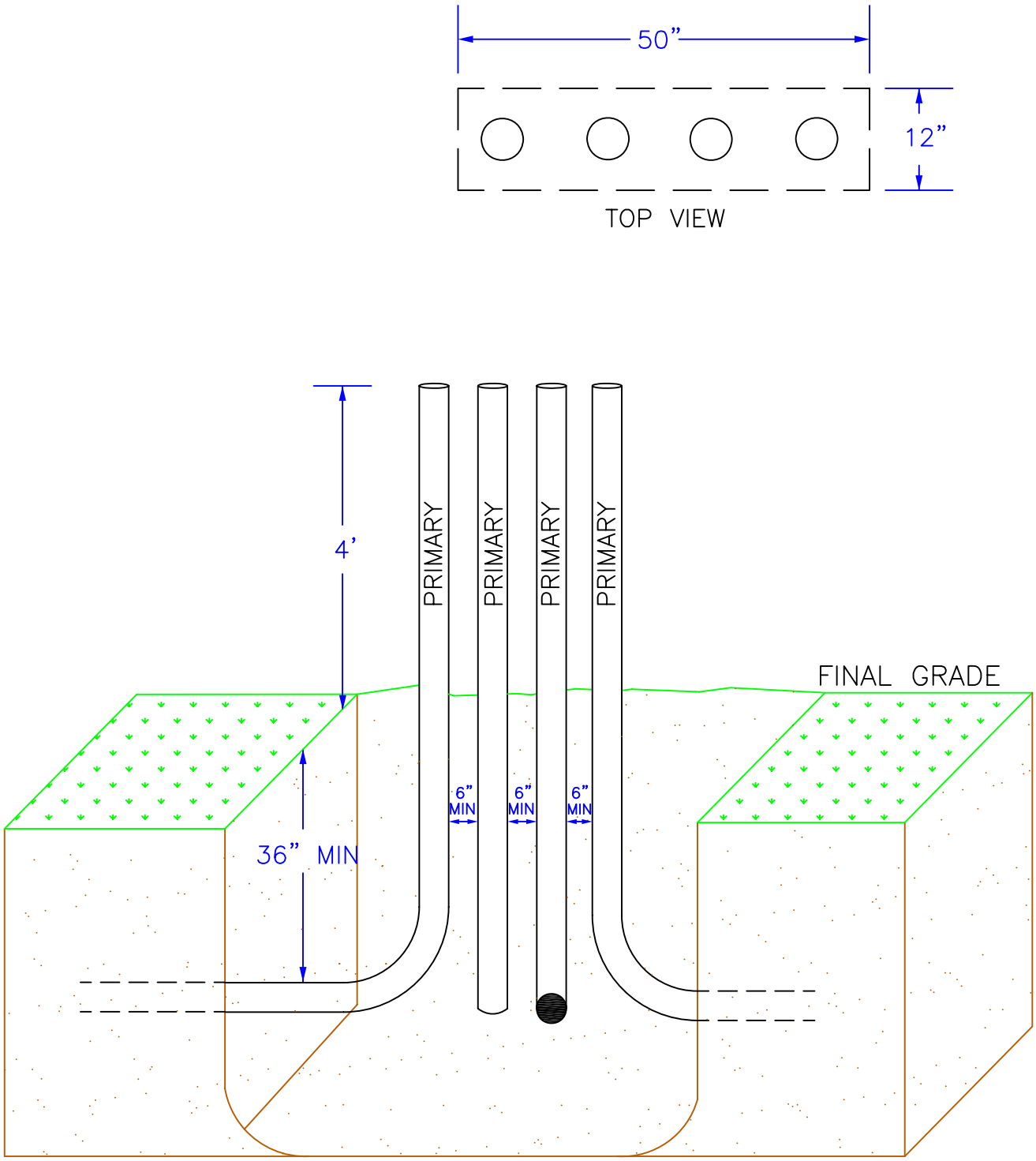


EXHIBIT6.DWG

TYPICAL THREE–PHASE
PRIMARY CABINET LOCATION

EXHIBIT 6

ISS 3–13–03, REV 10–22–09

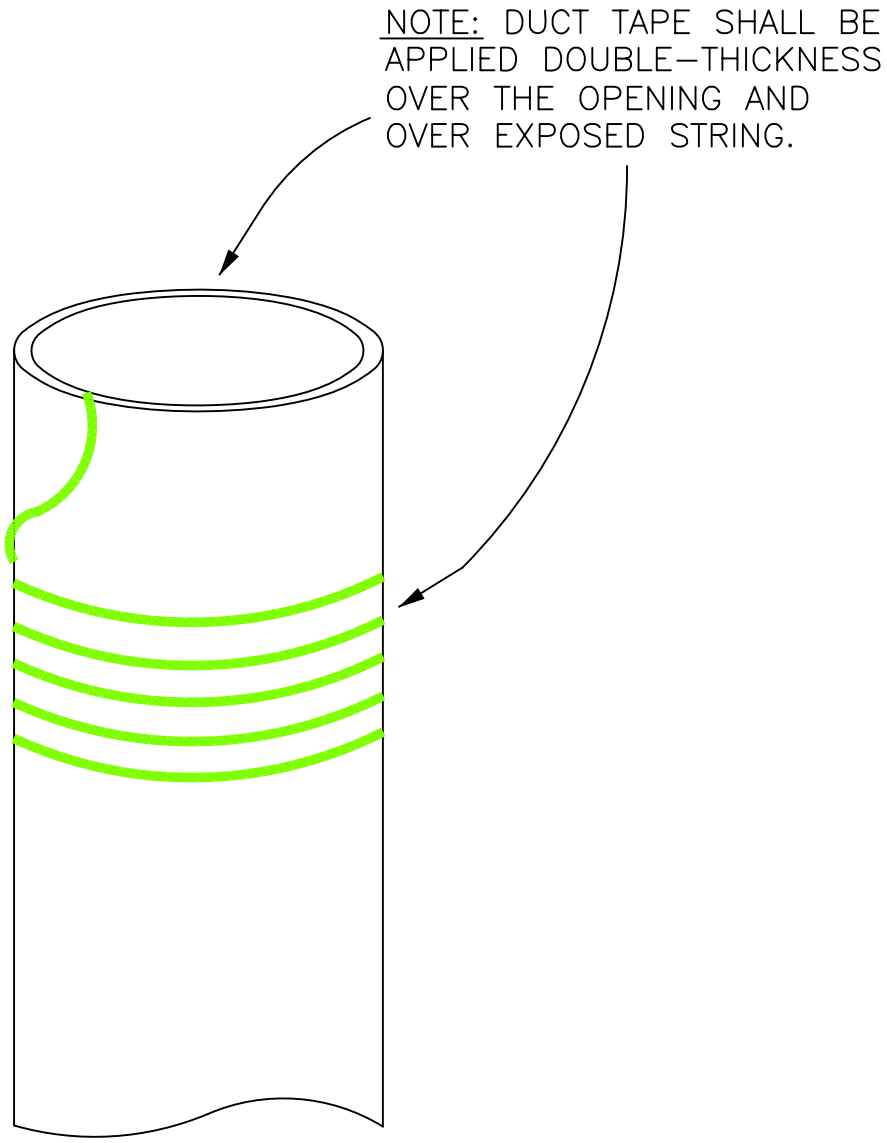


EXHIBIT7.DWG

TYPICAL STUB-UP TERMINATION POINT

EXHIBIT 7

ISS 3-13-03, REV 10-27-09

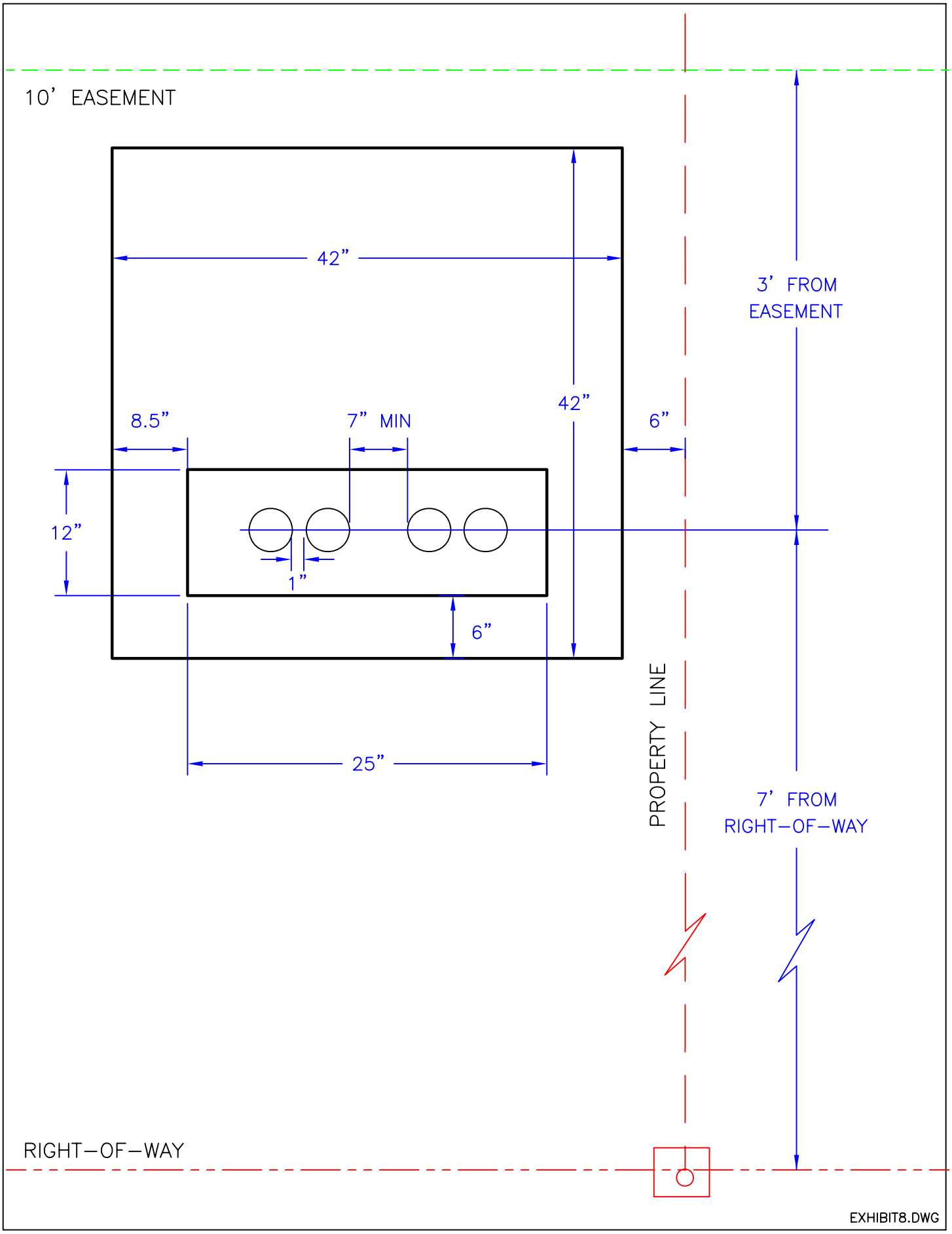


CONDUIT PLACEMENT FOR TYPICAL
1-PHASE TRANSFORMER LOCATION
IN EASEMENT

EXHIBIT 8

ISS 3-13-03, REV 10-27-09

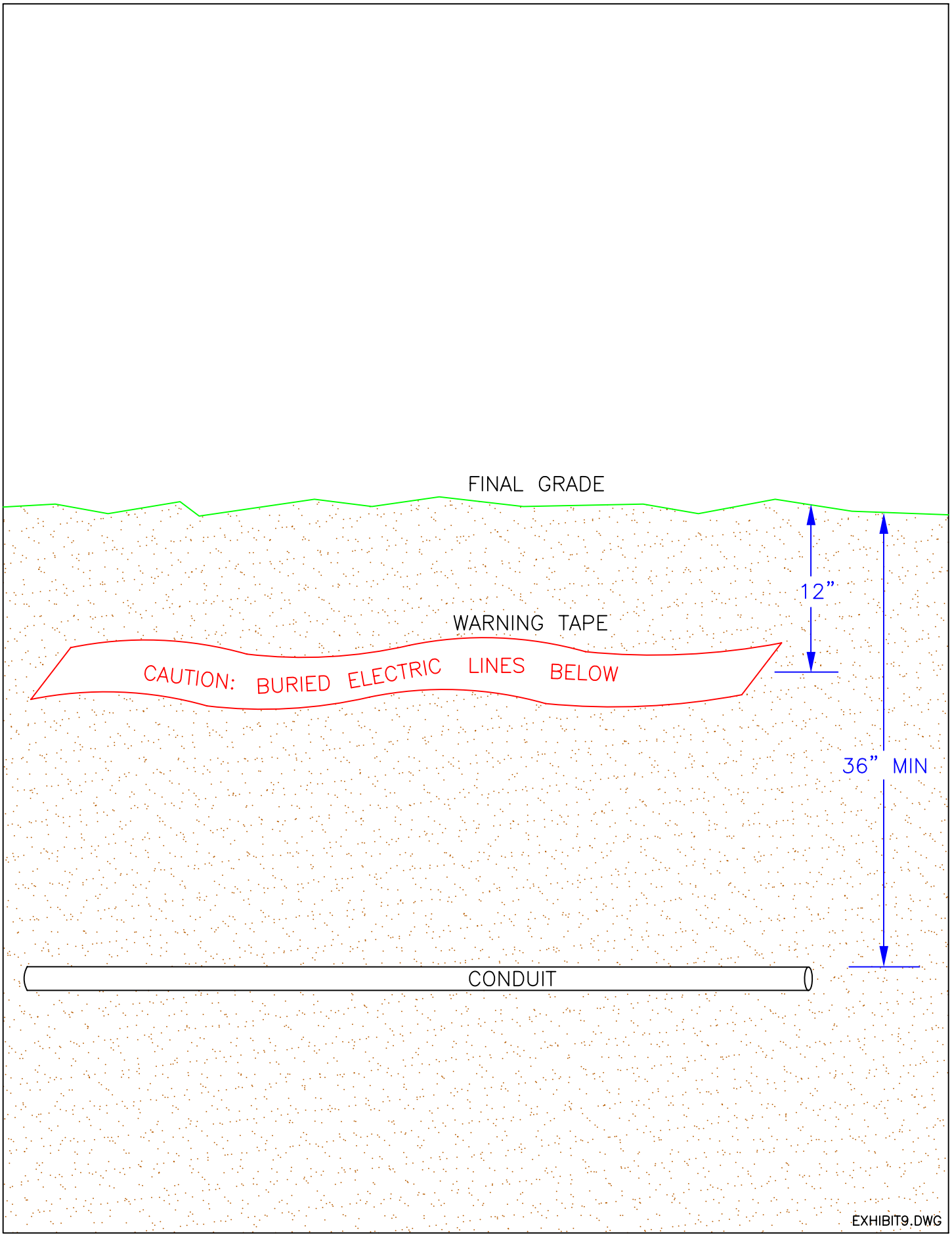


WARNING TAPE
PLACEMENT

EXHIBIT 9

ISS 3–13–03, REV 10–27–09

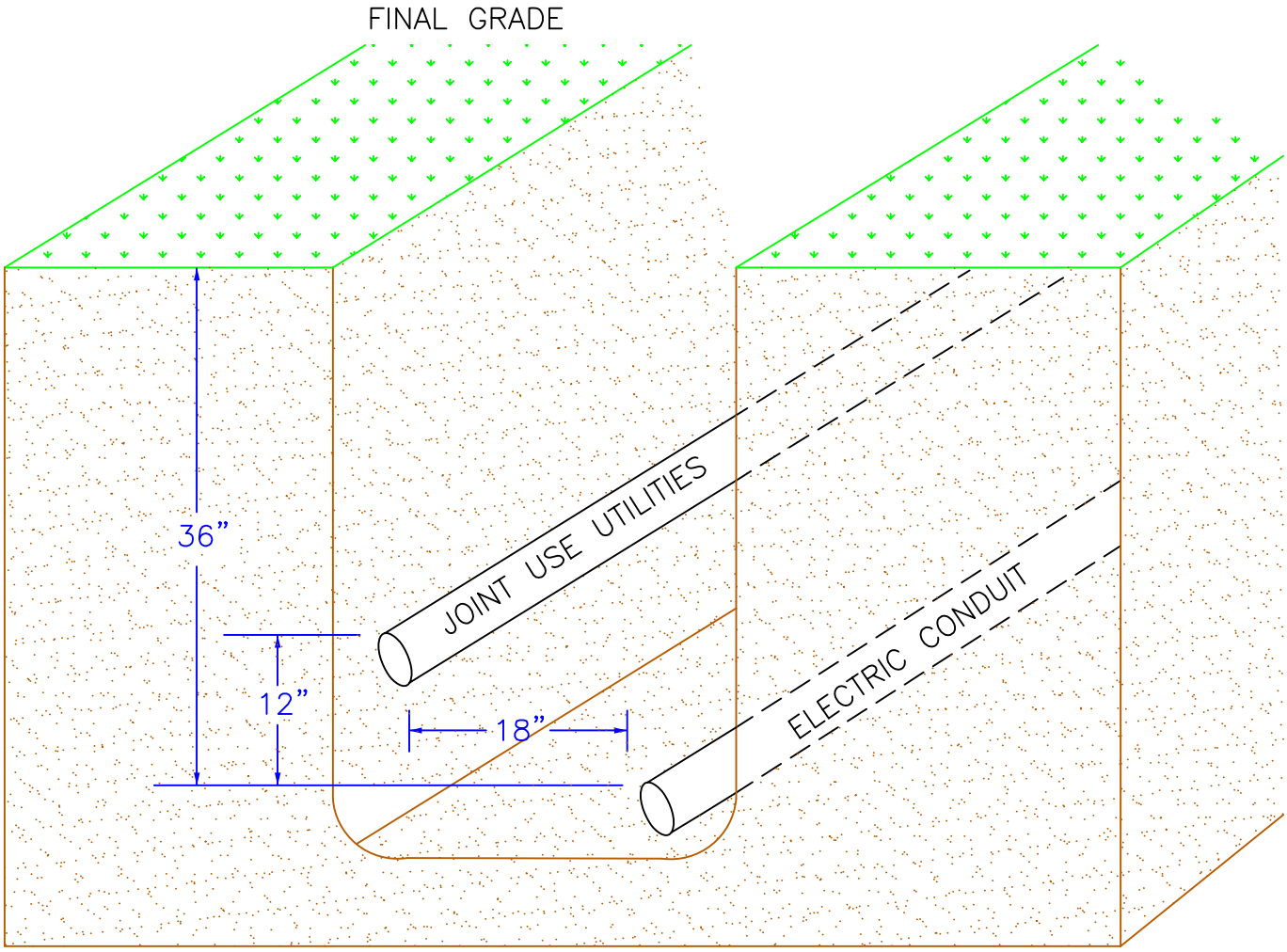


EXHIBIT10.DWG

CONDUIT CLEARANCES
(JOINT USE TRENCH)

EXHIBIT 10

ISS 3–13–03, REV 10–27–09

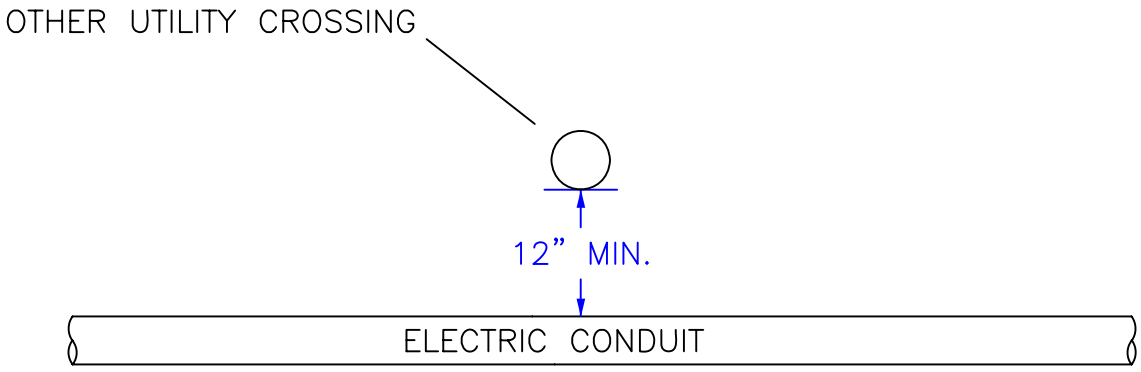


EXHIBIT11.DWG

MINIMUM VERTICAL CLEARANCE
AT CROSSINGS

EXHIBIT 11

ISSU 3-13-03, REV 10-27-09

# ⚠ WARNING

**Hazardous voltage inside.**

# Keep Out!

**May shock, burn or cause death.**

**If open or unlocked, immediately call**

**OCALA ELECTRIC UTILITY**

**352-351-6666**

## Energized Electrical Equipment

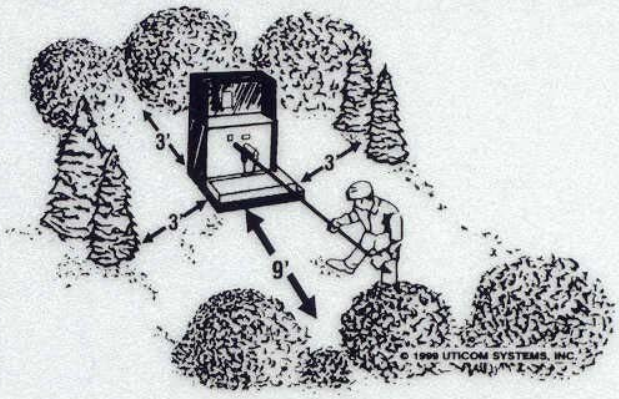


**We need room to work safely on this device. Please keep shrubs and structures 9 feet from the side with doors and 3 feet from other sides.**

**Obstructions may be damaged or removed during service restoration or maintenance.**

**Before Digging Call**

**352-351-6650**

**For Location of Underground Cable**

U6075W-OEU

EXHIBIT12.DWG

MINIMUM HORIZONTAL CLEARANCE

EXHIBIT 12

ISS 3-13-03, REV 10-27-09

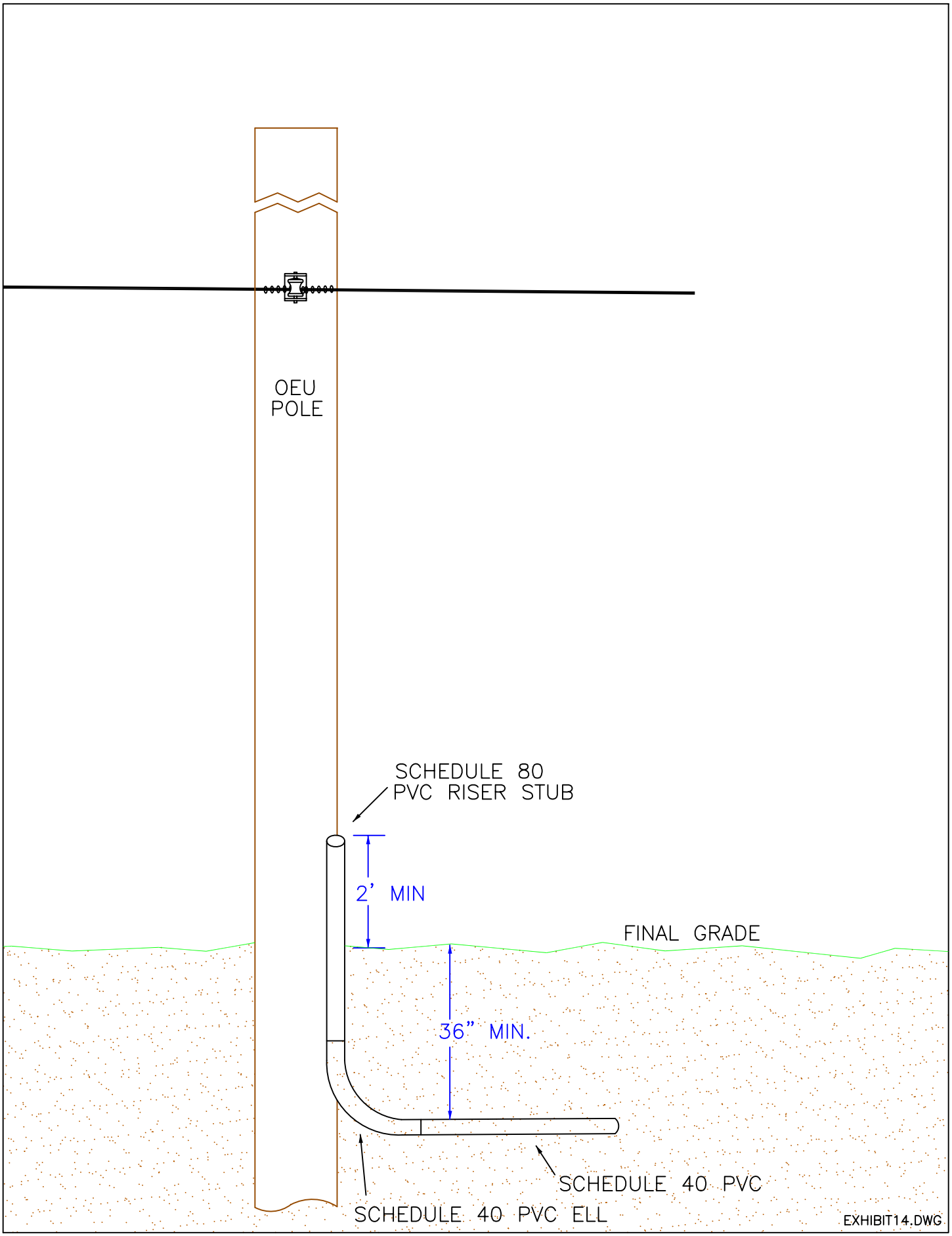


PRIMARY RISER STUB–UP INSTALLATION

EXHIBIT 14

ISS 1–30–06, REV 10–26–09

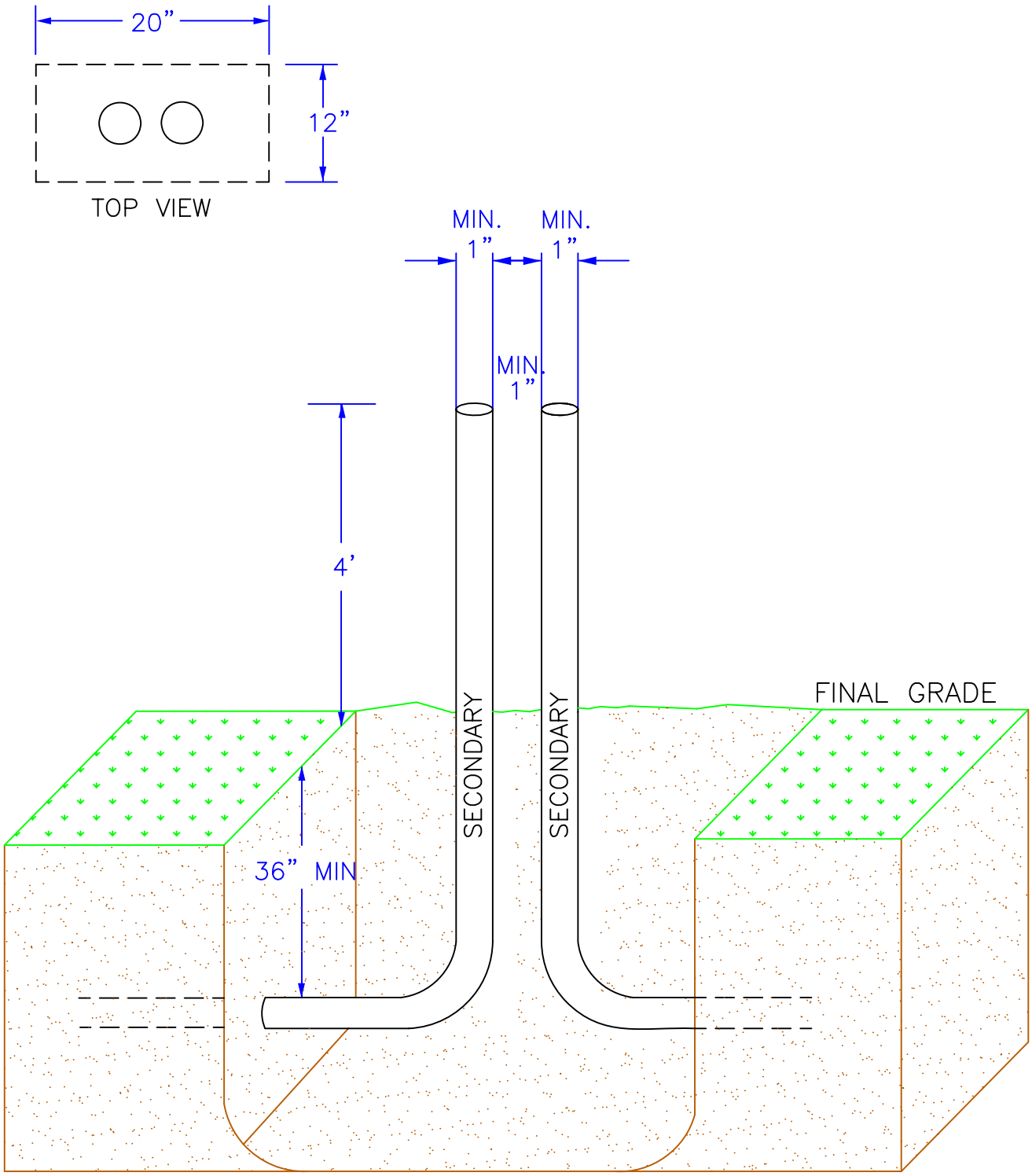


EXHIBIT15.DWG

TYPICAL SECONDARY VAULT LOCATION

EXHIBIT 15

ISS 4–19–06, REV 10–27–09

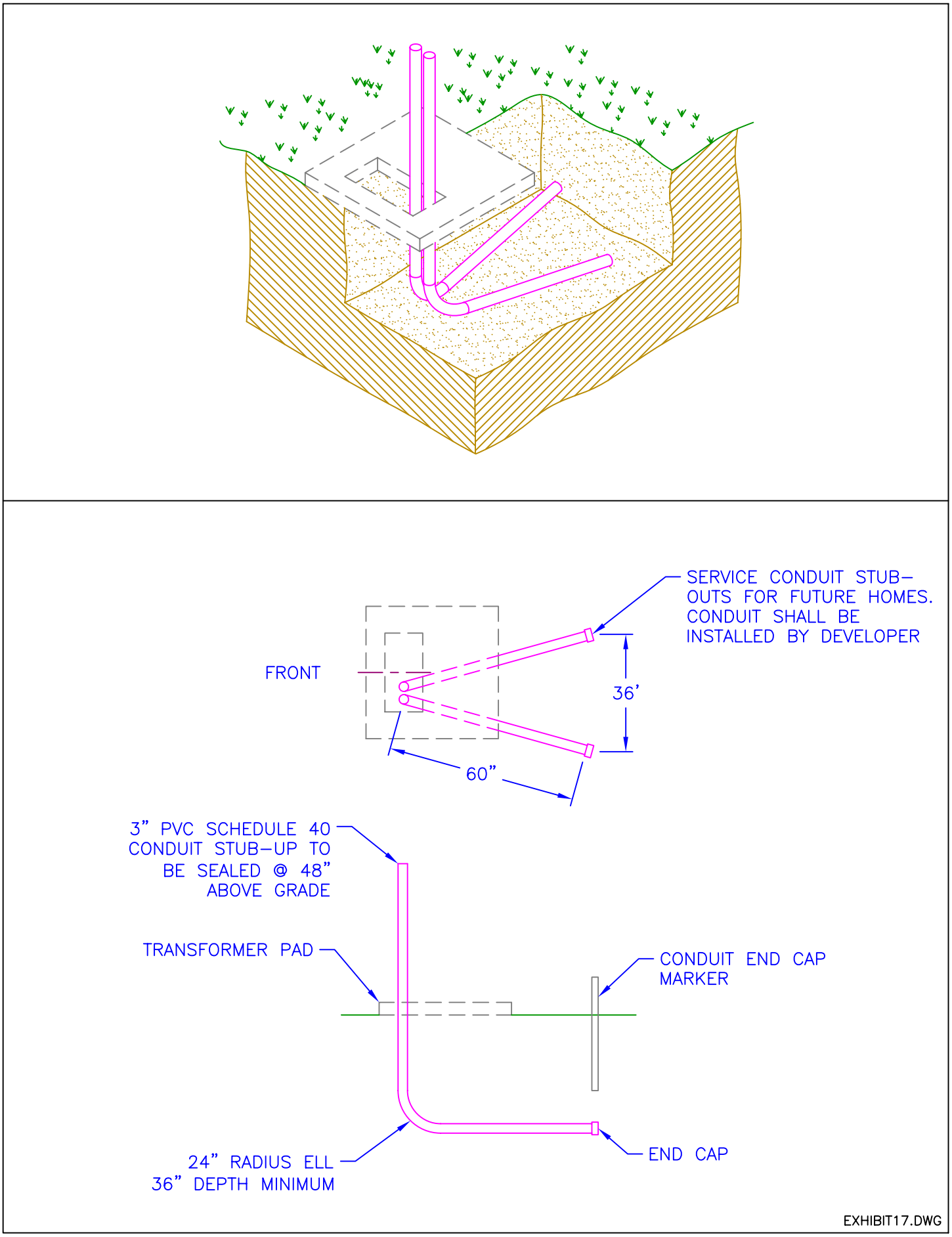


SERVICE CONDUIT STUB-OUT AT TRANSFORMER LOCATION

EXHIBIT 17

ISS 1-29-07, REV 10-29-09

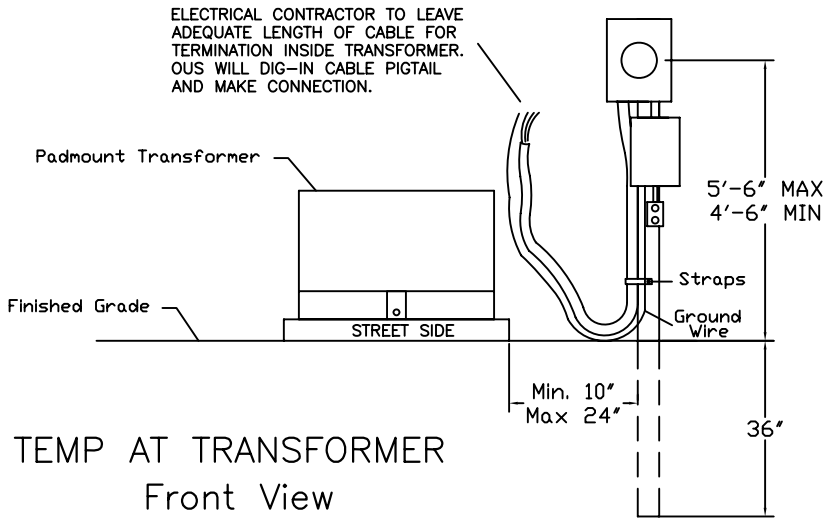


TEMP AT TRANSFORMER
Front View

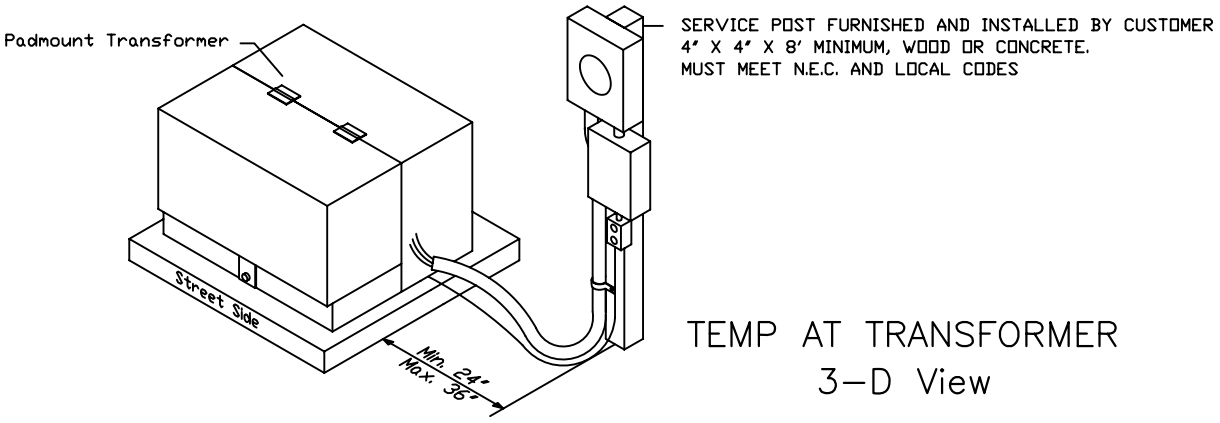


TEMP AT TRANSFORMER
3-D View

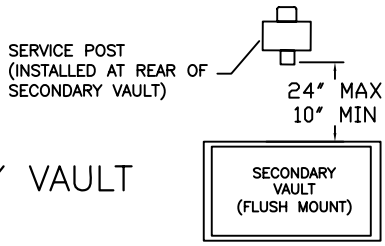


TEMP AT SECONDARY VAULT
TOP View

NOTES:
1. CABLE LOCATION REQUIRED PRIOR TO INSTALLATION OF TEMPORARY CONSTRUCTION POLE. CALL 48 HOURS IN ADVANCE.
2. OUS WILL MAKE FINAL CONNECTION OF CUSTOMER'S TEMP SERVICE CABLE IN TRANSFORMER OR SECONDARY VAULT.
3. DO NOT PULL TEMP SERVICE CABLE INTO TRANSFORMER THROUGH SERVICE STUB-OUTS.

EXHIBIT18.DWG

TEMPORARY CONSTRUCTION SERVICE FROM PADMOUNTED TRANSFORMER OR SECONDARY VAULT

EXHIBIT 18

ISS 1-29-07, REV 10-26-09

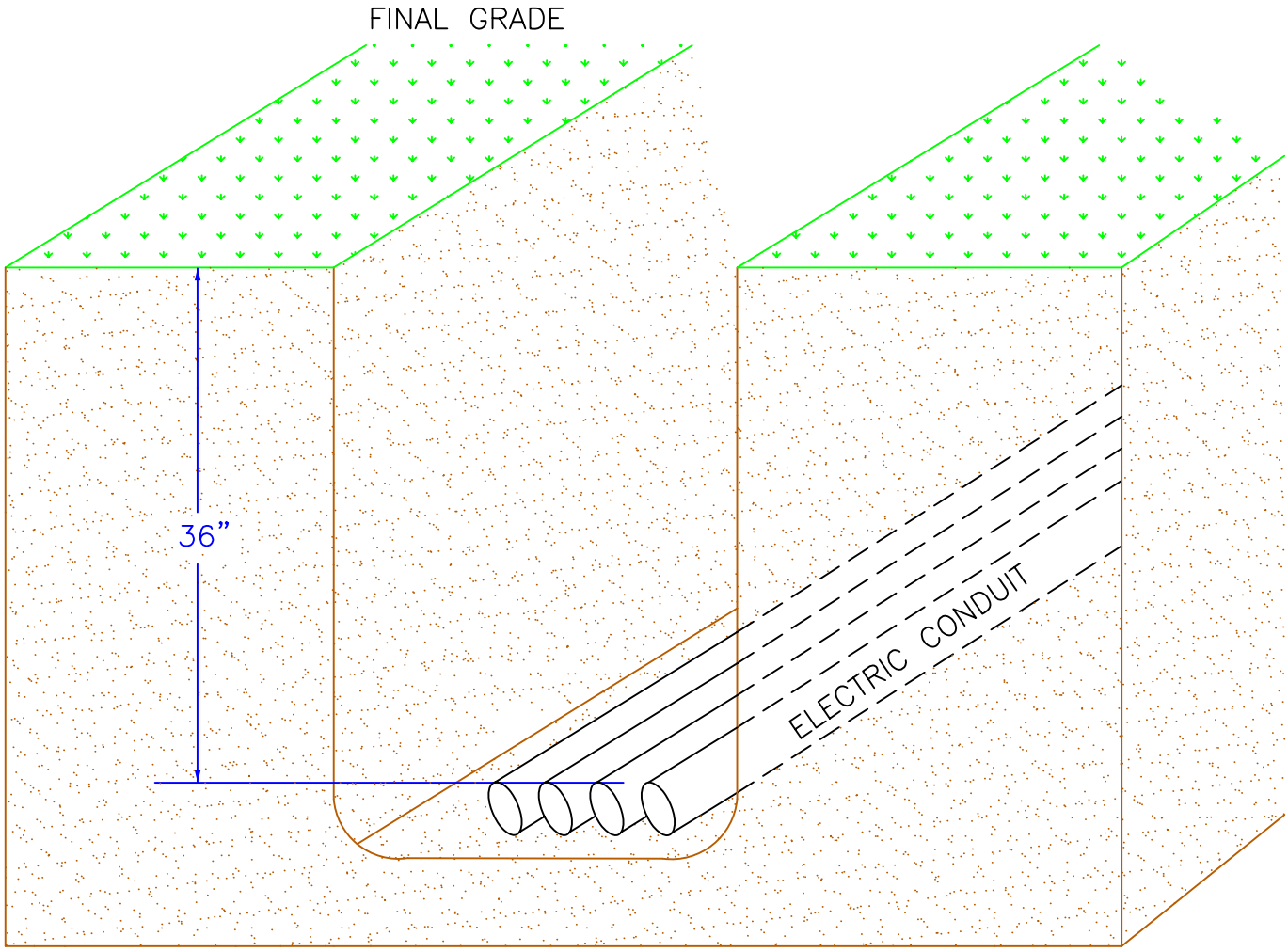


*When more than one conduit is being installed in a trench, no stacking of conduits is permitted. All conduits must lay flat in the trench.*

EXHIBIT19.DWG

MULTIPLE CONDUITS IN TRENCH

EXHIBIT 19

ISS 6-8-07, REV 10-26-09

DIRECTIONAL BORE CONVERSION

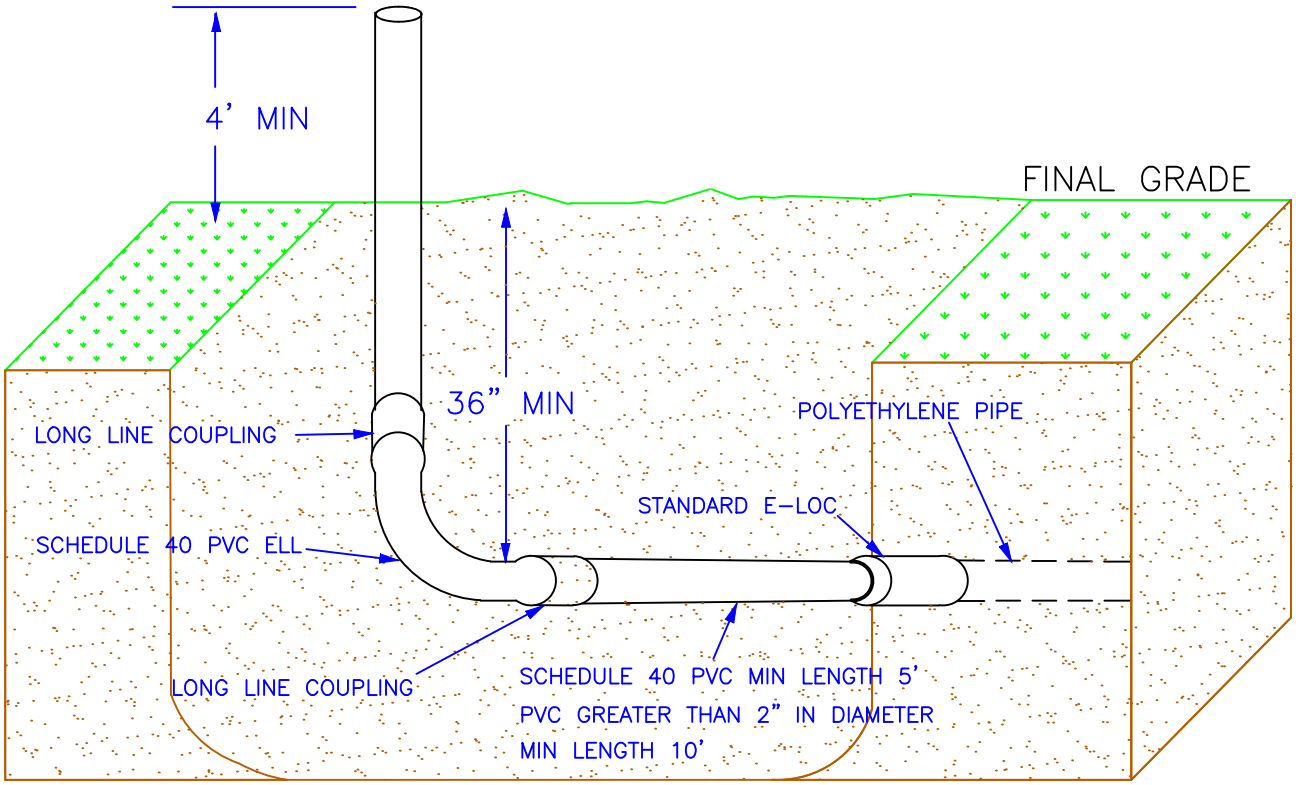


TYPICAL CONSTRUCTION FOR JOINING POLYETHYLENE TO PVC FOR RESIDENTIAL OR COMMERCIAL DIRECTIONAL BORE

EXHIBIT 20.DWG

EXHIBIT 20

ISS 08-16-11, REV 3-14-12

3-WIRE, OH/UG SERVICE (120/240V OR 120/208V, 400 AMP OR LESS) CUSTOMER-OWNED METER SOCKET

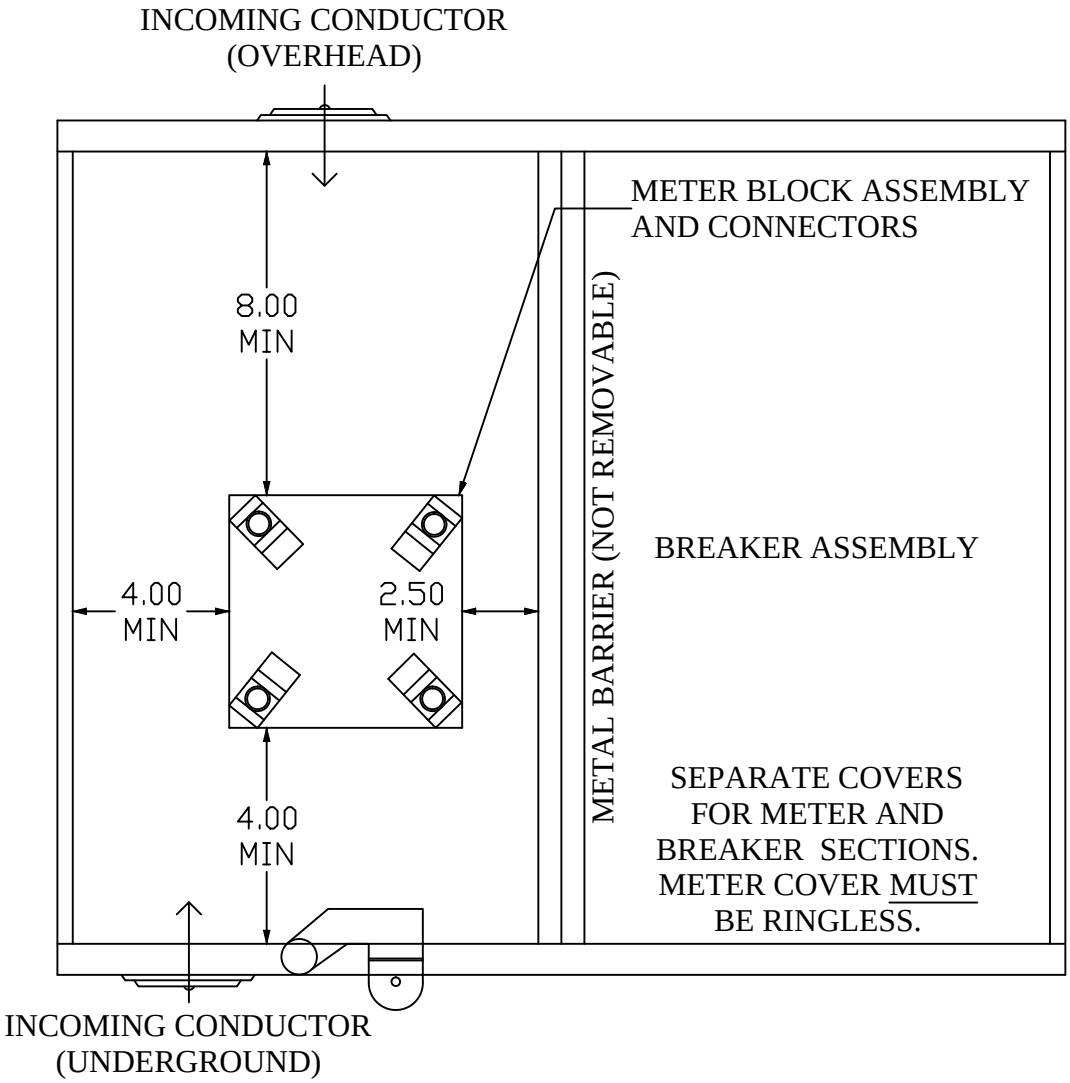


Notes:

1. If the socket is used for U.G. service and is built with no obstruction to full depth on either side of the block assembly area, (see bold square in drawing), min 4.00" clearance to left side, and 2.50 clearance to right side is acceptable (as shown) provided 3" of unobstructed depth is also made available at both sides of socket blocks for line side conductors.
2. If line conductors come in from the top of the socket, side to block clearance may be reduced to 2.5" with 3" obstruction depth at that side, and 2.50" block clearance to other side.
3. Socket must accept 3" conduit at bottom.
4. Bypass horns are not acceptable.
5. Meter housing must be grounded.
6. 5th terminal required if used on 3W 120/208 service.
7. Effective date for these requirements 8/22/08.

EXHIBIT21R.DWG

RESIDENTIAL METER SOCKET SPACING REQUIREMENTS

EXHIBIT 21R

ISS 10-23-08, REV 10-27-09

# NOT ACCEPTABLE FOR UNDERGROUND SERVICE

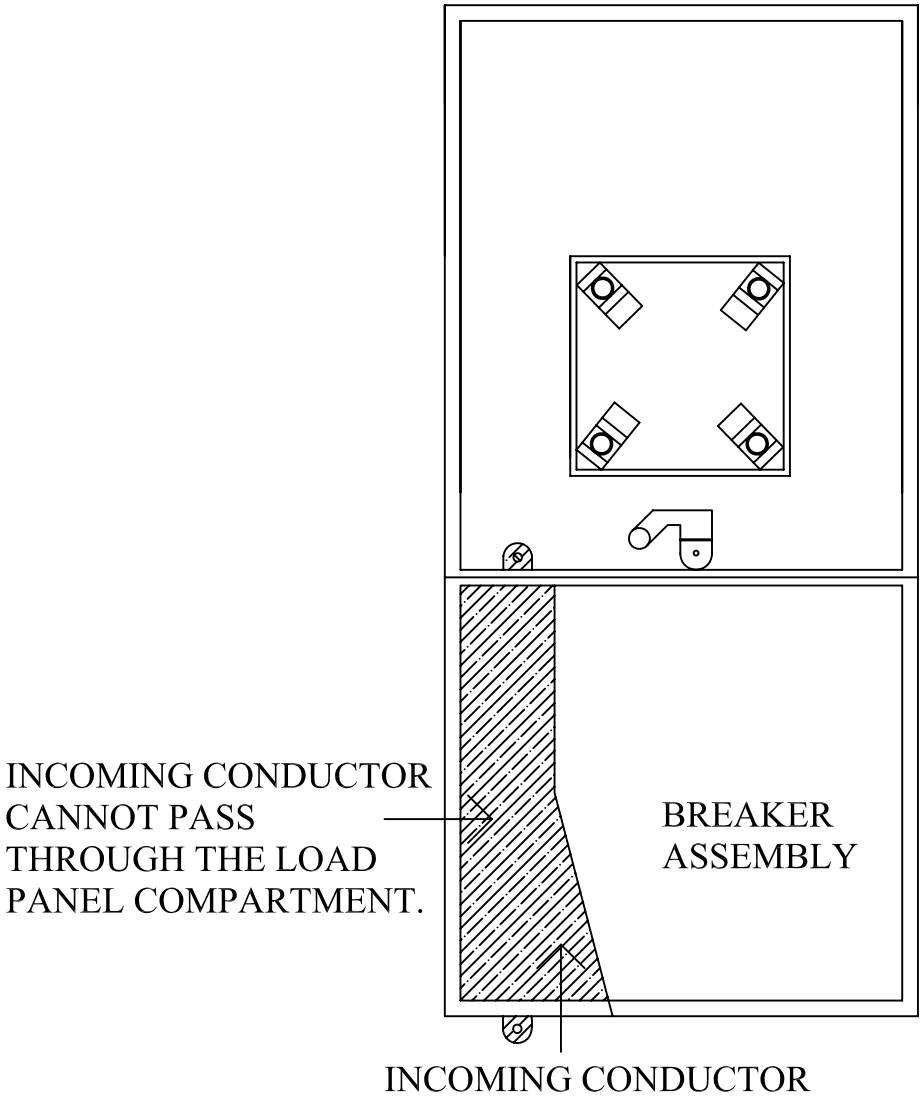


3-WIRE, UG SERVICE, (120/240V OR 120/208V)
CUSTOMER-OWNED METER SOCKET

TITLE: UNACCEPTABLE UNDERGROUND METER SOCKET

City of Ocala Utility Services

2100 NE 30 AVE, BLDG B
OCALA, FL 34470

PH: (352) 351-6620
FX: (352) 401-6961

ISS 8-22-08, REV 10-27-09

# SECONDARY / SERVICE CONDUIT FROM POLE TO METER SOCKET (S)

NOTES:

- RESIDENTIAL SERVICE CONDUCTORS TO 1 AND 2 FAMILY DWELLINGS TO BE OWNED AND INSTALLED BY THE CITY OF OCALA TO THE LINE SIDE TERMINALS OF THE METER SOCKET.
- CUSTOMER LOAD CONDUCTORS TO BE CONNECTED TO THE LOAD SIDE TERMINALS OF THE METER SOCKET BY THE CUSTOMER.
- SERVICE CONDUIT SHALL BE SUPPLIED AND INSTALLED BY THE CUSTOMER .
- SERVICE RISER CONDUIT SHOULD BE INSTALLED AS FLAT AGAINST THE WALL , AND SHALL BE ANCHORED TO THE WALL .
- BENDS IN CONDUIT ROUTE SHALL BE MADE WITH MANUFACTURED ELBOWS WITH LONG LINE CONDUIT COUPLINGS . HEATED BENDS IN CONDUIT ROUTE SHALL NOT BE ACCEPTABLE .
- ELBOWS MUST BE AT LEAST 24" RADIUS, 90-DEGREE ELBOWS .
- MAXIMUM OF A TOTAL OF 3 ELBOWS 90-DEGREE OR THE EQUIVALENT / COMBINATION OF 3 ELBOWS AT 90-DEGREES CAN BE USED .

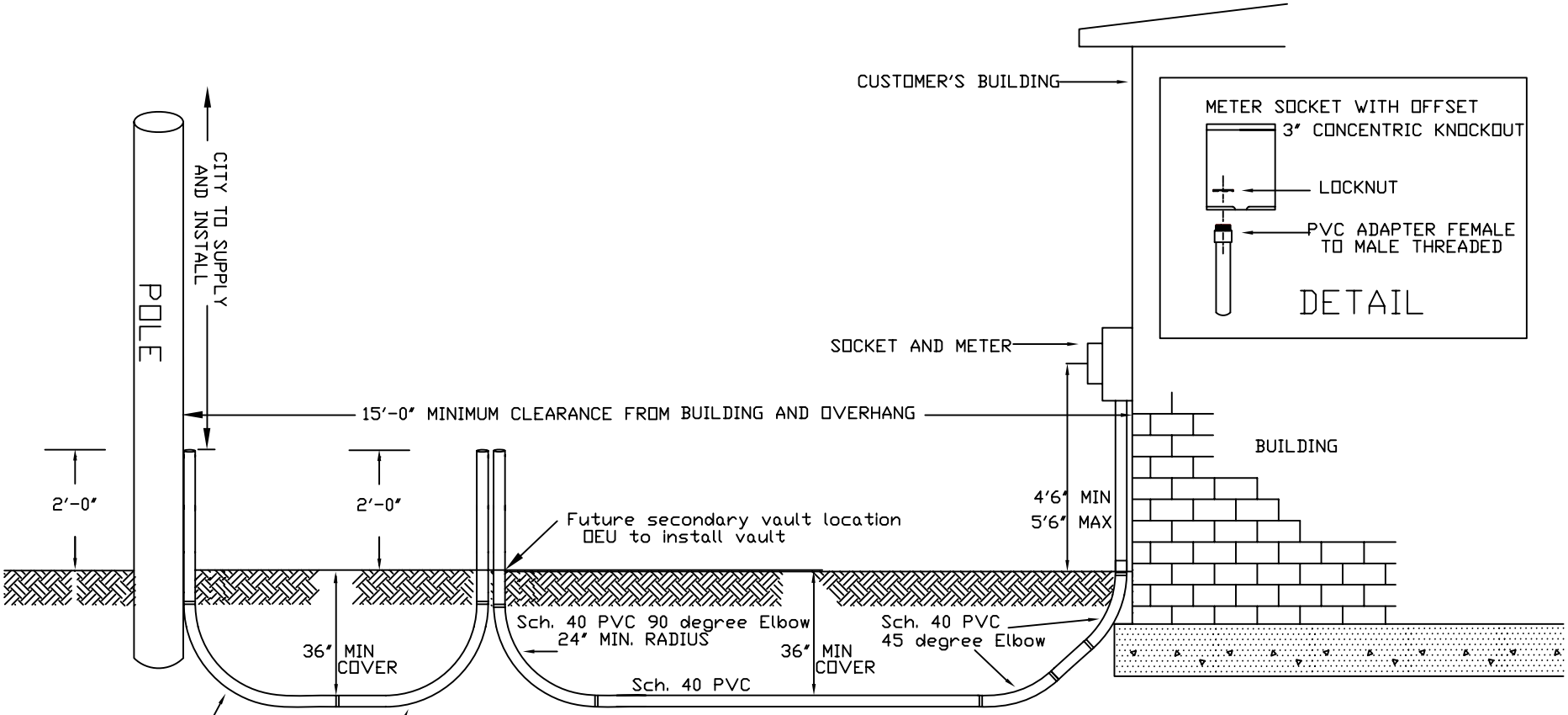


CONDUITS :

THE CUSTOMER SHALL SUPPLY AND INSTALL THE CONDUIT ELBOW(S) AND CONDUITS FROM THE BASE OF THE POLE TO THE METER SOCKET(S) .

# SECONDARY / SERVICE CONDUIT FROM FUTURE PADMOUNT TRANSFORMER TO METER SOCKET (S)

NOTES:

- RESIDENTIAL SERVICE CONDUCTORS TO 1 AND 2 FAMILY DWELLINGS TO BE OWNED AND INSTALLED BY THE CITY OF OCALA TO THE LINE SIDE TERMINALS OF THE METER SOCKET.
- CUSTOMER LOAD CONDUCTORS TO BE CONNECTED TO THE LOAD SIDE TERMINALS OF THE METER SOCKET BY THE CUSTOMER.
- SERVICE CONDUIT SHALL BE SUPPLIED AND INSTALLED BY THE CUSTOMER .
- SERVICE RISER CONDUIT SHOULD BE INSTALLED AS FLAT AGAINST THE WALL , AND SHALL BE ANCHORED TO THE WALL .
- BENDS IN CONDUIT ROUTE SHALL BE MADE WITH MANUFACTURED ELBOWS WITH LONG LINE CONDUIT COUPLINGS . HEATED BENDS IN CONDUIT ROUTE SHALL NOT BE ACCEPTABLE .
- ELBOWS MUST BE AT LEAST 24" RADIUS, 90-DEGREE ELBOWS .
- MAXIMUM OF A TOTAL OF 3 ELBOWS 90-DEGREE OR THE EQUIVALENT / COMBINATION OF 3 ELBOWS AT 90-DEGREES CAN BE USED .

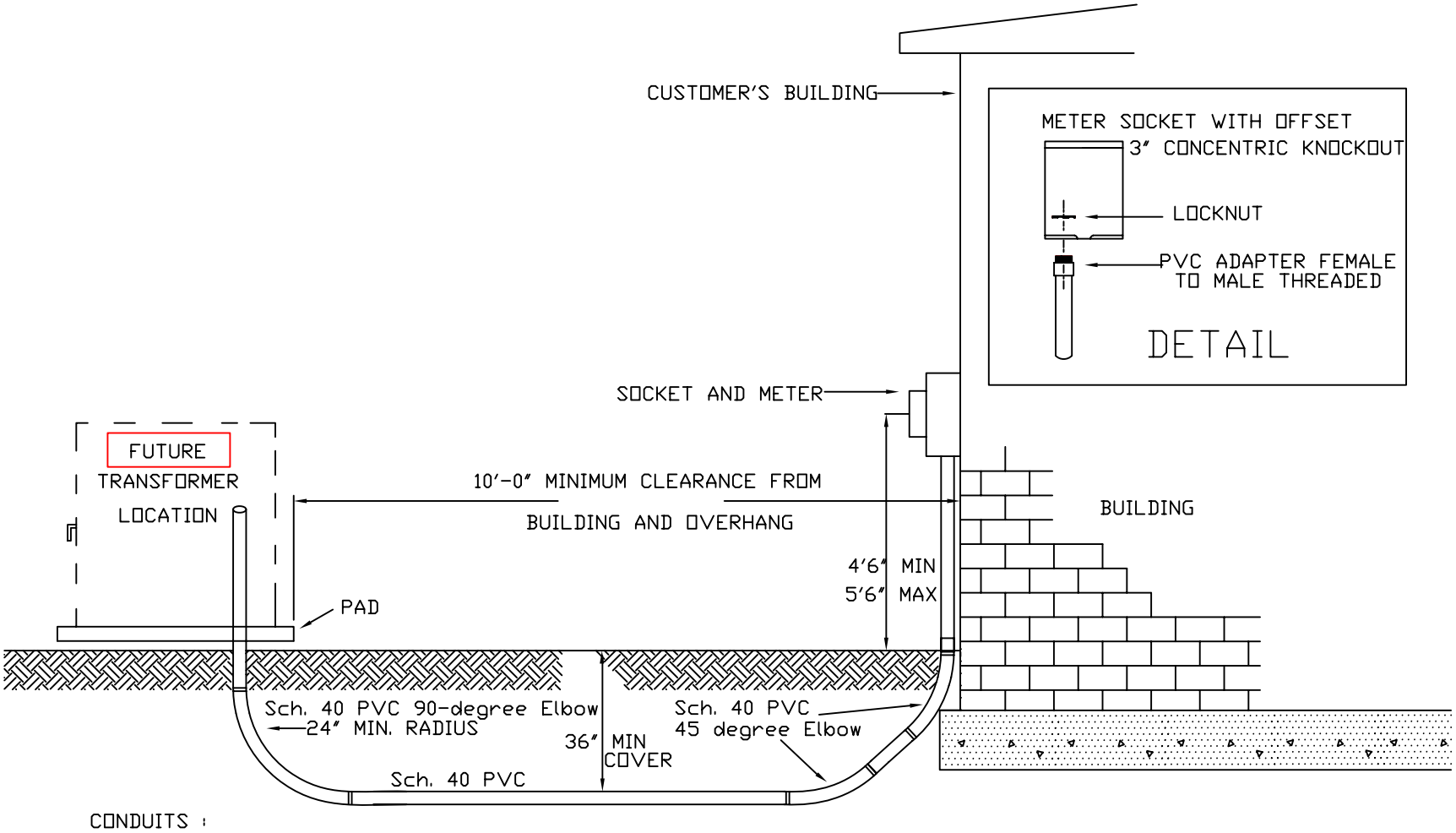


THE CUSTOMER SHALL SUPPLY AND INSTALL THE CONDUIT ELBOWS AND CONDUITS FROM THE TRANSFORMER CONDUIT EXTENSION TO THE METER SOCKET(S) .

# SECONDARY / SERVICE CONDUIT FROM EXISTING PADMOUNT TRANSFORMER TO METER SOCKET (S)

NOTES:
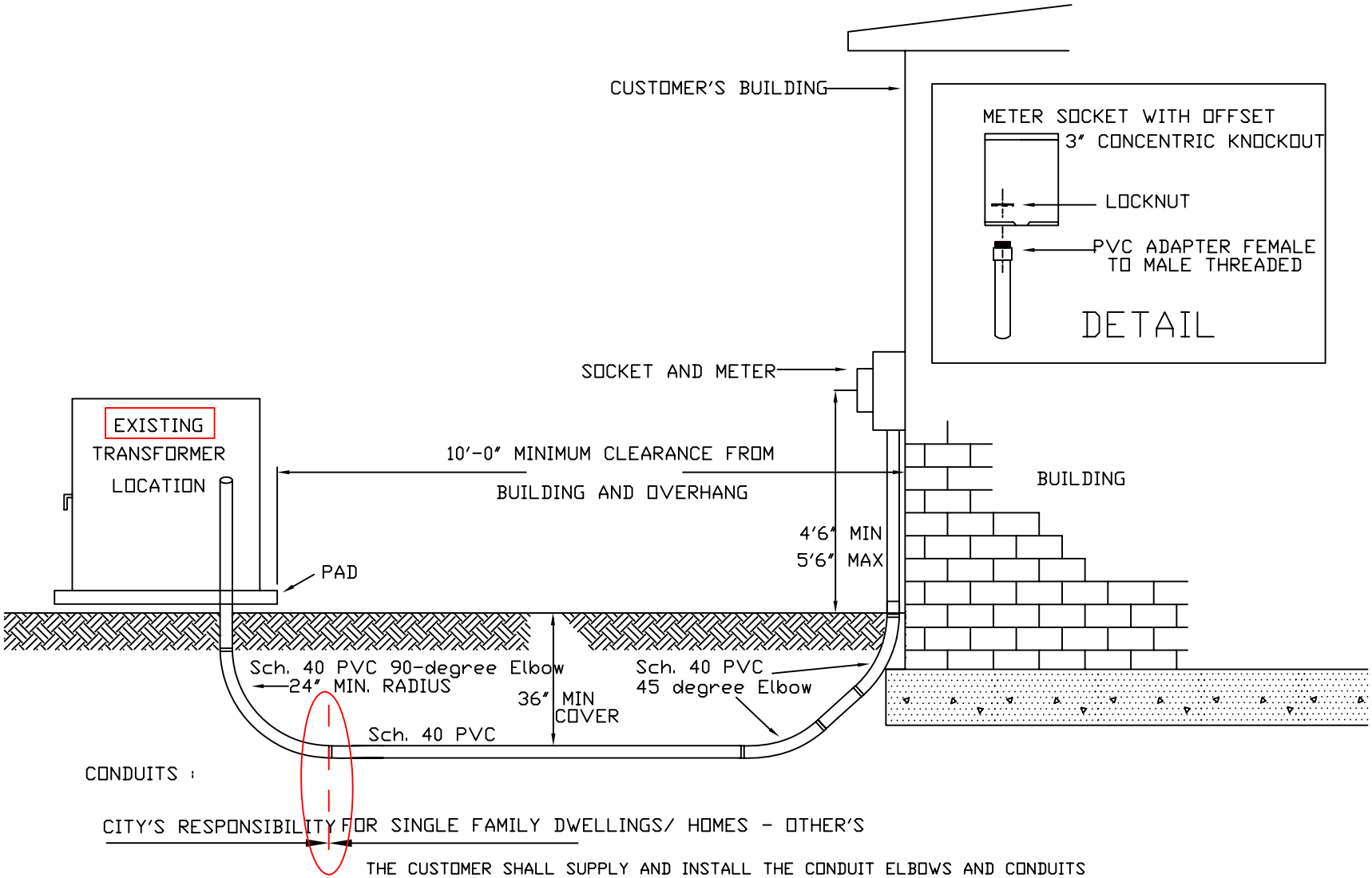
- RESIDENTIAL SERVICE CONDUCTORS TO 1 AND 2 FAMILY DWELLINGS TO BE OWNED AND INSTALLED BY THE CITY OF OCALA TO THE LINE SIDE TERMINALS OF THE METER SOCKET.
- CUSTOMER LOAD CONDUCTORS TO BE CONNECTED TO THE LOAD SIDE TERMINALS OF THE METER SOCKET BY THE CUSTOMER.
- SERVICE CONDUIT SHALL BE SUPPLIED AND INSTALLED BY THE CUSTOMER .
- SERVICE RISER CONDUIT SHOULD BE INSTALLED AS FLAT AGAINST THE WALL , AND SHALL BE ANCHORED TO THE WALL .
- BENDS IN CONDUIT ROUTE SHALL BE MADE WITH MANUFACTURED ELBOWS WITH LONG LINE CONDUIT COUPLINGS . HEATED BENDS IN CONDUIT ROUTE SHALL NOT BE ACCEPTABLE .
- ELBOWS MUST BE AT LEAST 24" RADIUS, 90-DEGREE ELBOWS .
- MAXIMUM OF A TOTAL OF 3 ELBOWS 90-DEGREE OR THE EQUIVALENT / COMBINATION OF 3 ELBOWS AT 90-DEGREES CAN BE USED .