ITEM	EXISTING	PROPOSED
TRAFFIC CONTROL BOX	t.s.c.b.	
STREET SIGN	sign	
LOOP DETECTOR		
PEDESTRIAN LIGHT	light	
DISABLED PARKING		

DATE REVISED: *JANUARY 30, 2003*

SECTION 478-1.1

Water & Sewer Department
Utilities Division
(352) 351-6772

CITY OF OCALA
STANDARD DETAIL

TRAFFIC LEGEND

GENERAL

A

SHT 1 OF 1

ITEM	EXISTING	PROPOSED
WATER MAIN	8"w — 8"w	8" water main
BUTTERFLY VALVE	b.v.	
GATE VALVE	W.V.	
AIR RELEASE VALVE	air release valve	
SPRINKLER HEAD	sprinkler head	
FLUSH POINT	flush point	
SAMPLING POINT	sampling point	
FIRE HYDRANT	fire hydrant	
TEE		
PLUG OR CAP		
BEND		
CROSS		
PUMPING STATION	pumping station	
WATER METER	water meter	
CHECK VALVE	check valve	
REDUCER	reducer	
WATER SERVICE (SINGLE)	w.s.	
WATER SERVICE (DOUBLE)	w.s.	
BLOW OFF	w.s.	

DATE REVISED: *JANUARY 30, 2003*

SECTION 478-1.1

Water & Sewer Department
Utilities Division
(352) 351-6772

CITY OF OCALA
STANDARD DETAIL

WATER SYSTEM LEGEND

GENERAL

B

SHT 1 OF 1

ITEM	EXISTING	PROPOSED
SEWER MAIN	8"SS 8"SS	
FORCE MAIN	8"fm	
MANHOLE	san. m.h.	
DROP MANHOLE	san. m.h.	
MANHOLE STUB OUT	san. m.h.	
LIFT STATION (WET WELL)	lift station	
PLUG VALVE	p.v.	
GATE VALVE	g.v.	
BUTTERFLY VALVE	b.v.	
AIR RELEASE VALVE	air release valve	
REDUCER	reducer	
SEWER SERVICE (MANHOLE)	m.h. s/s	
SEWER SERVICE (MAIN LINE)	s/s	

DATE REVISED: *JANUARY 30, 2003*

SECTION 478-1.1

Water & Sewer Department
Utilities Division
(352) 351-6772

CITY OF OCALA
STANDARD DETAIL

SANITARY SEWER SYSTEM GENERAL

GENERAL

C

SHT 1 OF 1

ITEM	EXISTING	PROPOSED
DITCH BOTTOM INLET		
CURB INLET (SINGLE SIDED)		
CURB INLET (DOUBLE SIDED)		
CURB INLET WITH GRATE INLET (SINGLE SIDED)	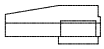	
CURB INLET WITH GRATE INLET (DOUBLE SIDED)	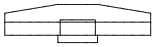	
DRAINAGE FLOW		
SWALE		
STORM PIPE	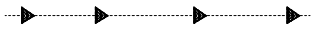	
END WALL	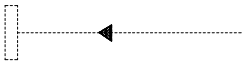	

DATE REVISED: *JANUARY 30, 2003*

SECTION 478-1.1

Water & Sewer Department
Utilities Division
(352) 351-6772

CITY OF OCALA
STANDARD DETAIL

STORM DRAINAGE SYSTEM LEGEND

GENERAL

D

SHT 1 OF 1

ITEM	EXISTING	PROPOSED
CENTERLINE	C/L	C/L
BASELINE	B/L	B/L
RIGHT OF WAY PROPERTY LINE	P/L	P/L
EASEMENT LINE	P/L	P/L
RIGHT OF WAY LINE	R/W	R/W
STATIONING ALONG C/L OR B/L	3 B/L SURVEY 4	5 EVEN 500' DASH BOTH SIDES OF LINE
FENCE (CHAIN LINK)		
FENCE (WIRE)		
FENCE (WOOD)		
FENCE (BLOCK/ BRICK)		
FENCE (STONE)		
TREE	18" oak	NOTE: TREE TO BE REMOVED 18" oak (T.B.R.)
EDGE OF WOODED AREA		
HEDGE	hedge	hedge (T.B.R.)
POWER POLE (WOOD)		
POWER POLE (CONCRETE)		
POWER POLE (METAL)		
GUY WIRE & ANCHOR		
CONTOUR LINE	70'	70'
MAIL BOX	m.b.	
BUILDING		
RAILROAD TRACKS		

DATE REVISED: *JANUARY 30, 2003*

SECTION 478-1.1

Water & Sewer Department
Utilities Division
(352) 351-6772

CITY OF OCALA
STANDARD DETAIL

STREET LEGEND

GENERAL

E

SHT 1 OF 3

ITEM	EXISTING	PROPOSED
PAVED ROAD		
DIRT ROAD	dirt road	
CURB & GUTTER		
DROP CURB & GUTTER		
DRIVEWAY (CONCRETE)	c. d/w	
DRIVEWAY (ASPHALT)	a. d/w	
DRIVEWAY (DIRT OR LIMEROCK)	d. d/w	
PAVEMENT REMOVAL & REPLACEMENT		
PAVEMENT REMOVAL		
HANDICAP RAMP		

DATE REVISED: *JANUARY 30, 2003*

SECTION 478-1.1

Water & Sewer Department
Utilities Division
(352) 351-6772

CITY OF OCALA
STANDARD DETAIL

STREET LEGEND

GENERAL

E

SHT 2 OF 3

ITEM	EXISTING	PROPOSED
BURIED TELEPHONE CABLE	BT (200PR)	
GAS MAIN	6" gas	
UNDERGROUND CABLE TELEVISION	UG(CATV)	

DATE REVISED: *JANUARY 30, 2003*

SECTION 478-1.1

Water & Sewer Department
Utilities Division
(352) 351-6772

CITY OF OCALA
STANDARD DETAIL

STREET LEGEND

GENERAL

E

SHT 3 OF 3

A

ABD.	ABANDONED
AC.	ACRES
ACT.	ACTUAL
ADJ.	ADJUST
A.T.G.	ADJUST TO GRADE
A.R.V.	AIR RELEASE VALVE
ALT.	ALTERNATE
A.N.S.I.	AMERICAN NATIONAL STANDARDS INSTITUTE
A.S.T.M.	AMERICAN STANDARDS FOR TESTING & MATERIALS
A.W.W.A.	AMERICAN WATER WORKS ASSOCIATION
APPRH.	APPROACH
APPR.	APPROVE
APPROX.	APPROXIMATE
A.	AREA
A.C.P.	ASBESTOS CEMENT PIPE
ASPH.	ASPHALT
ASSEM.	ASSEMBLY
A.C.L.	ATLANTIC COASTLINE RAILROAD
AVE.	AVENUE
A.D/W	ASPHALT DRIVEWAY

B

BK.	BACK
B. TO B.	BACK TO BACK
B.W.F.	BARBED WIRE FENCE
B/L	BASELINE
BRG.	BEARING
BEG.	BEGIN
B.M.	BENCH MARK
BIT.	BITUMINOUS
B.C.P.	BITUMINOUS COATED PIPE
BL.W	BLOCK WALL
B.O.V.	BLOW OFF VALVE
BOT.	BOTTOM
B. ELEV.	BOTTOM ELEVATION
BLVD.	BOULEVARD
BLKHD.	BULKHEAD
B.V.	BUTTERFLY VALVE
B.C.	BURIED CABLE
B.O.	BY OTHERS
B. & J.	BORE & JACK

C

C.I.	CAST IRON
C.I.P.	CAST IRON PIPE
C.B.	CATCH BASIN
CTR.	CENTER
C/L	CENTERLINE
C. TO C.	CENTER TO CENTER
CH.	CHAIN
C.L.F.	CHAIN LINK FENCE
CHAN.	CHANNEL
C.V.	CHECK VALVE
CHD.	CHORD
CIR.	CIRCLE
CL.	CLEAR
COL.	COLUMN
CO.	COMPANY
CONC.	CONCRETE
C.B.S.	CONCRETE BLOCK STRUCTURE
C. & G.	CURB & GUTTER
C. D/W	CONCRETE DRIVEWAY
C. HDW.	CONCRETE HEADWALL
C.M.	CONCRETE MONUMENT
C. P/L	CONCRETE PARKING LOT
C.P.	CONCRETE PIPE
CONC. P.	CONCRETE POLE
C. S/W	CONCRETE SIDEWALK
CONN.	CONNECTION
CONST.	CONSTRUCT/CONSTRUCTION
CONT.	CONTINUE/CONTINUOUS
CONTR.	CONTRACT/CONTRACTOR
COORD.	COORDINATE
COR.	CORNER
C.M.P.	CORRUGATED METAL PIPE
CT.	COURT
C.F.	CUBIC FEET
C.F.S.	CUBIC FEET PER SECOND
C.Y.	CUBIC YARD
CULV.	CULVERT
C.I.P.	CAST IN PLACE

D

D	DEGREE OF CURVE
DEG.	DEGREES
DEPT.	DEPARTMENT
D.O.T.	DEPARTMENT OF TRANSPORTATION (FN.)
D.H.W.	DESIGN HIGH WATER
DIAG.	DIAGONAL
DIM.	DIMENSION
DIR.	DIRECTION
D.D/W	DIRT DRIVEWAY
D/R	DIRT ROAD
D.S/W	DIRT SIDEWALK
DIST.	DISTANCE
DIT.	DITCH
DBL.	DOUBLE
DR.	DRIVE
D/W	DRIVEWAY
DRN	DRAIN
D.R.A.	DRAINAGE RETENTION AREA
DWG.	DRAWING
D/IN.	DROP INLET
D/M.H.	DROP MANHOLE
D/C	DROP CONNECTION
D.I.P.	DUCTILE IRON PIPE

E

EA.	EACH
ESMT.	EASEMENT
E/L	EASEMENT LINE
E.	EAST
E.B.L.	EASTBOUND LANE
E/P	EDGE OF PAVEMENT
ELEC.	ELECTRIC
E.M.S.	ELECTRONIC MARKING SYSTEM
ELEV.	ELEVATION
ELLIP.	ELLIPTICAL
EMBK.	EMBANKMENT
EMUL.	EMULSIFIED
ENCL.	ENCLOSURE
E.O.S.	END OF SURVEY
E.W.	END WALL
E. TO E	END TO END
ENG.	ENGINEER
ENT.	ENTRANCE
EQ.	EQUAL
EQUIP.	EQUIPMENT
EST.	ESTIMATE
ETC.	ETCETRA
EXC.	EXCAVATE
EXIST.	EXISTING
E.G.	EXISTING GRADE
EXP.	EXPANSION
EXP. JT	EXPANSION JOINT
EXT.	EXTENSION
EA. W.	EACH WAY
E.G.	FOR EXAMPLE

F

F. TO F	FACE TO FACE
FED.	FEDERAL
F.A.	FEDERAL AID
F.A.P.	FEDERAL AID PROJECT
F.H.W.A.	FEDERAL HIGHWAY ADMINISTRATION
FT.	FEET
F.PF	FEET PER FOOT
F.P.M.	FEET PER MINUTE
F.P.S.	FEET PER SECOND
F./FEN.	FENCE (HOGWIRE OR BARBED WIRE)
FERT.	FERTILIZE
F.B.	FIELD BOOK
FIN.	FINISH
F.F	FINISHED FLOOR
F.H.	FIRE HYDRANT
F.E.S.	FLARED END SECTION
FLEX.	FLEXIBLE
FLR.	FLOOR
F.D.O.T.	FLORIDA DEPARTMENT OF TRANSPORTATION
FL.	FLOW
F.L.	FLOW LINE
F/H	FLUSH HEADER
F.P.	FLUSHING POINT
FTG.	FOOTING
F.M.	FORCE MAIN
F.C.M.	FOUND CONCRETE MONUMENT
FD.I.P.	FOUND IRON PIPE
FD. N&D	FOUND NAIL & DISK
FOUND.	FOUNDATION
FR.	FRAME
F. & G.	FRAME & GATE
FURN.	FURNISH
F. & I.	FURNISH & INSTALL
FUT.	FUTURE

G

GAL.	GALLON
GALV.	GALVANIZED
G.I.P.	GALVANIZED IRON PIPE
G.M.	GAS MAIN
G.S.	GAS SERVICE
G.V.	GATE VALVE
GR.	GRADE
GRT.	GRATE
GRD.	GROUND
G.R.	GUARD RAIL
GUT.	GUTTER
G.W.	GUY WIRE
G.P.	GUY POLE
G.P.D.	GALLONS PER DAY
G.P.H.	GALLONS PER HOUR
G.P.M.	GALLONS PER MINUTE

H

HNDRL.	HANDRAIL
H.C.	HEADER CURB
HDWL.	HEADWALL
H.	HEIGHT
H.W.	HIGH WATER
HWY.	HIGHWAY
HORIZ.	HORIZONTAL
HR.	HOUR
HSE.	HOUSE
HYD.	HYDRANT
H.C.	HOUSE CONNECTION
HNDCP.	HANDICAPPED

I

IN.	INCH
IN/FT	INCHES PER FOOT
INC.	INCORPORATED
INCR.	INCREASER
I.D.	INSIDE DIAMETER
INSTL.	INSTALL
INV.	INVERT
I.P.	IRON PIPE
I.E.	THAT IS

J

JT.	JOINT
JCT.	JUNCTION
J.B.	JUNCTION BOX

L

L.B.	LIMEROCK BASE
L.B.R.	LIMEROCK BEARING RATIO
LR.D/W	LIMEROCK DRIVEWAY
LIN.	LINEAR
L.F.	LINEAR FOOT
LK.	LINK
L.C.	LONG CHORD
L.S.	LUMP SUM
LA.	LANE
L.S.	LIFT STATION
LT.	LEFT
LB.	POUND

M

MAINT.	MAINTENANCE
M.B.	MAILBOX
M.H.	MANHOLE
M.U.T.C.D.	MANUAL OF UNIFORM TRAFFIC CONTROL DEVICES
MFG.	MANUFACTURING
MAT.	MATERIAL
MAX.	MAXIMUM
M.H.W.	MEAN HIGH WATER
M.L.W.	MEAN LOW WATER
M.S.L.	MEAN SEA LEVEL
MECH.	MECHANIC
MED.	MEDIAN
M.P.	MILE POST
M.P.H.	MILES PER HOUR
MIN.	MINIMUM
MISC.	MISCELLANEOUS
MOD.	MODIFY
MON.	MONUMENT
M/L	MORE OR LESS
M.J.	MECHANICAL

N

N. & D.	NAIL & DISK
N.	NORTH
N.B.L.	NORTH BOUND LANE
N.E.	NORTH EAST
N.W.	NORTH WEST
N.I.C.	NOT IN CONTRACT
N.T.S.	NOT TO SCALE
NO.	NUMBER

O

O.C.	ON CENTER
OPT.	OPTION
ORG.	ORIGINAL
OZ.	OUNCE
O.D.	OUTSIDE DIAMETER
O. TO O.	OUTSIDE TO OUTSIDE
O.F.	OVERFLOW
O.H.	OVERHEAD
O.H./P.	OVERHEAD POWER
O.H./T.	OVERHEAD TELEPHONE
O.H./T.V.	OVERHEAD TELEVISION
O-PASS	OVERPASS

P

PAV'T.	PAVEMENT
Q.	PEAK DISCHARGE
PED.	PEDESTRIAN
P.C.P.	PERMANENT CONTROL POINT
P.R.M.	PERMANENT REFERENCE MONUMENT
PH.	PHASE
PL.	PLACE
PT.	POINT
P.O.B.	POINT OF BEGINNING
P.C.C.	POINT OF COMPOUND CURVE
P.C.	POINT OF CURVATURE
P.O.C.	POINT OF CURVE
P.I.	POINT OF INTERSECTION
P.R.C.	POINT OF REVERSE CURVE
P.T.	POINT OF TANGENT
P.V.C.	POINT OF VERTICAL CURVE
P.V.I.	POINT OF VERTICAL INTERSECTION
P.V.T.	POINT OF VERTICAL TANGENCY
PBT.	POLYBUTYLENE TUBING
PET.	POLYETHYLENE TUBING
PVC.	POLYVINYLCHLORIDE
LB.	POUND
P.S.I.	POUNDS PER SQUARE INCH
P.P.	POWER POLE
PRCST.	PRECAST
PREST.	PRESTRESSED
P.G.	PROFILE GRADE
PROJ.	PROJECT
P/C	PROPERTY CORNER
P/L	PROPERTY LINE
PROP.	PROPOSED
P.S.	PUMP STATION

R

R. or RAD.	RADIUS
R.R.	RAILROAD
RGE.	RANGE
R.B.	RECORD BOOK
RED.	REDUCER
REF.	REFERENCE
R.M.	REFERENCE MONUMENT
R.P.	REFERENCE POINT
REINF.	REINFORCEMENT
R.C.P.	REINFORCED CONCRETE PIPE
RELOC.	RELOCATE
REM.	REMOVAL
R. & R.	REMOVAL & REPLACEMENT
REP.	REPLACEMENT
REQ.	REQUIRED
RES.	RESIDENCE
RET. W	RETAINING WALL
RT.	RIGHT
R/W	RIGHT OF WAY
RD.	ROAD
RDWY.	ROADWAY
RK.	ROCK
RTE.	ROUTE

S

S.P.	SAMPLING POINT
SAN.	SANITARY
S.C.L.	SEABOARD COASTLINE RAILROAD
SEC.	SECTION
SEC. COR.	SECTION CORNER
S. & M.	SEED & MULCH
SEP.	SEPARATOR
S/S	SEWER SERVICE
SHT.	SHEET
S/W	SIDE WALK
SL.	SLOPE
S.A.	SODDED AREA
S.	SOUTH
S.B.L.	SOUTHBOUND
S.E.	SOUTHEAST
S.W.	SOUTHWEST
SPCL.	SPECIAL
S.C.	SPECIAL TO CURVE
SPEC.	SPECIFICATION
S.T.	SPECIAL TO TANGENT
S.H.	SPRINKLER HEAD
SQ. FT.	SQUARE FEET
SQ. IN.	SQUARE INCH
SQ. YD.	SQUARE YARD
STD.	STANDARD
S.R.	STATE ROAD
STA.	STATION
S. D/W	STONE DRIVEWAY
STM. SEW.	STORM SEWER
ST.	STREET
S.P.	STREET POST
S.S.	STREET SIGN
STRUC.	STRUCTURE
SUBGR.	SUBGRADE
SUPPLE.	SUPPLEMENTAL
SURF.	SURFACE
SURV.	SURVEY
SWL.	SWALE
SYMM.	SYMMETRICAL
S.B.V.	SOIL BEARING VALVE

T

TAB.	TABULATION
TAN.	TANGENT
T.L.C.	TANGENT LENGTH TO CURVE
T.T.C.	TANGENT TO CURVE
T.S.	TANGENT TO SPIRAL
T.B.	TELEPHONE BOX
TERR.	TERRACE
T.B.P.	TEST BORING POINT
T.B.A.	TO BE ABANDONED
T.B.R.	TO BE REMOVED
T.B.R.&RP.	TO BE REMOVED & REPLACED
T.B.R.&RL.	TO BE REMOVED & RELOCATED
T.B.S.	TO BE SALVAGED
T.EL.	TOP ELEVATION
T.C.	TOP OF CURVE
TOPO.	TOPOGRAPHY
T.S. & V.	TAPPING SLEEVE & VALVE
TWP.	TOWNSHIP
T.S.	TRAFFIC SIGN
T.S.B.	TRAFFIC SIGNAL BOX
TRANS.	TRANSITION
TYP.	TYPICAL
T.D.H.	TOTAL DYNAMIC HEAD
T.B.R.B.O.	TO BE REMOVED BY OTHERS

U

U.G.	UNDERGROUND
U.G./P.	UNDERGROUND POWER
U.G./T.	UNDERGROUND TELEPHONE CABLE
U.G./T.V.	UNDERGROUND TELEVISION CABLE
U.-PASS	UNDERPASS
UN.	UNIT
U.I.P.	USE IN PLACE
US C&GS	US COAST & GEODETIC SURVEY
US G.S.	US GEOLOGICAL SURVEY

V

V.	VALVE
V.B.	VALVE BOX
VAR.	VARIABLE
VEH.	VEHICLE
VER.	VERTICAL
V.C.	VERTICAL CURVE
V.P.C.	VERTICAL POINT OF CURVE
V.P.I.	VERTICAL POINT OF INTERSECTION
V.P.T.	VERTICAL POINT OF TANGENCY
V.C.P.	VITRIFIED CLAY PIPE
VOL.	VOLUME

W

W.M.	WATER MAIN
W.M./B.	WATER METER BOX
W.R.A.	WATER RETENTION AREA
W/S	WATER SERVICE
W.V.	WATER VALVE
WT.	WEIGHT
W.P.	WELL POINT
W.	WEST
W.B.L.	WESTBOUND LANE
WD.	WIDE/WIDTH
W.	WITH
W/OUT	WITHOUT
W.F.	WOODEN FENCE

UTILITY	DIMENSION SYMBOL	LOCATION	UNDERGROUND DEPTH
Force Main	A	11'	48"
Cable TV	B	9'	24"
Telephone Conduit	C	7'	30"
Telephone Cable	D	5'	30"
Electric Conduit	E	3'	36"
Pole	F	1'	
Sanitary Sewer		CENTER	Varies
Water	G	8'	48"
Gas	H	4'	36"
Reuse FM	I	–	48"

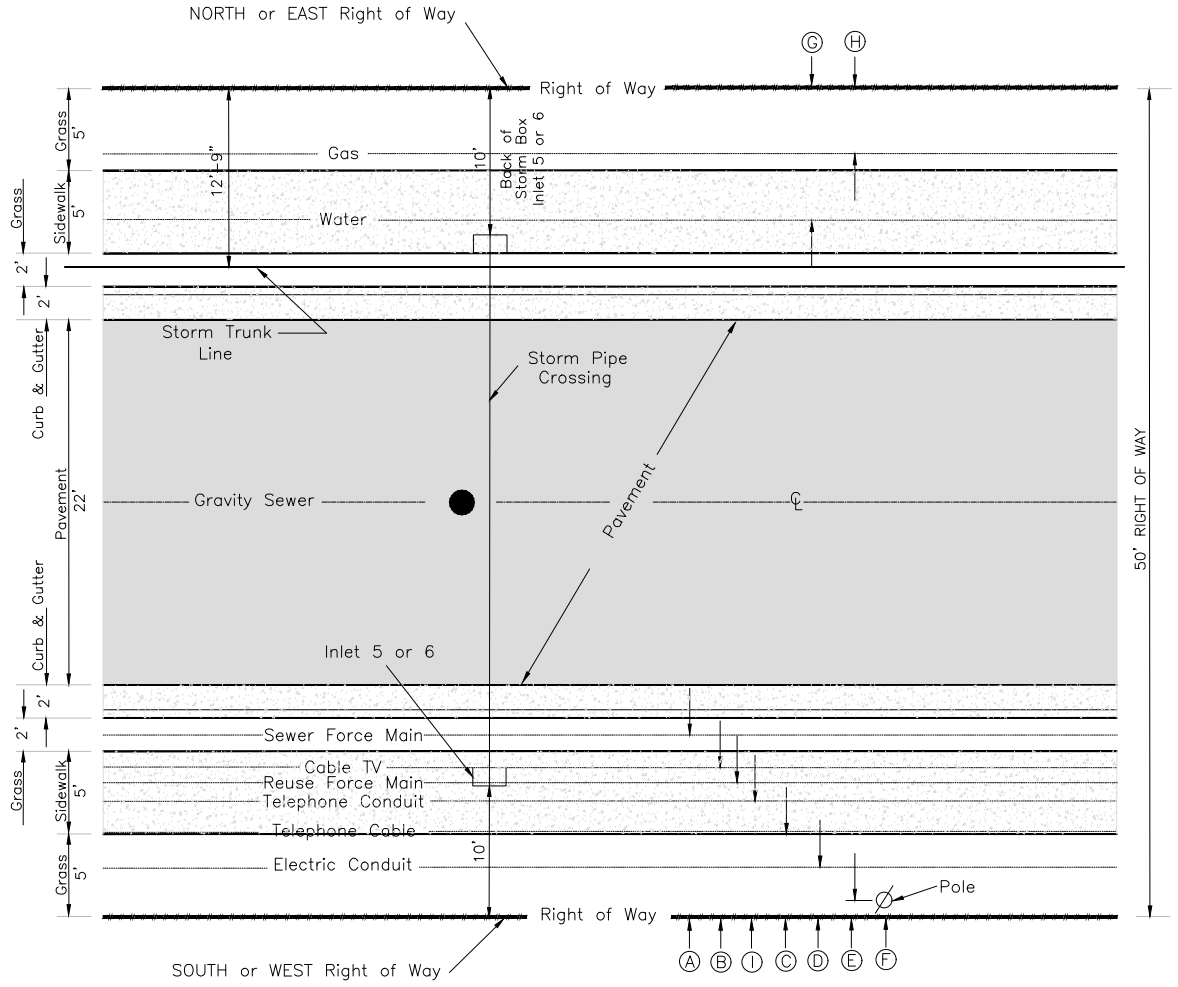

DATE REVISED: *DECEMBER18,2012*

SECTION 478–1.3

Water & Sewer Department
Utilities Division
(352) 351–6772

CITY OF OCALA
STANDARD DETAIL

TYPICAL UTILITY LOCATIONS IN 50' RIGHT OF WAY WITH CURB & GUTTER

A

SHT 1 OF 1

UTILITY	DIMENSION SYMBOL	LOCATION	UNDERGROUND DEPTH
Force Main	A	11'	48"
Cable TV	B	9'	24"
Telephone Conduit	C	7'	30"
Telephone Cable	D	5'	30"
Electric Conduit	E	3'	36"
Pole	F	1'	
Sanitary Sewer		CENTER	Varies
Water	G	8'	48"
Gas	H	4'	36"
Reuse FM	I	–	–

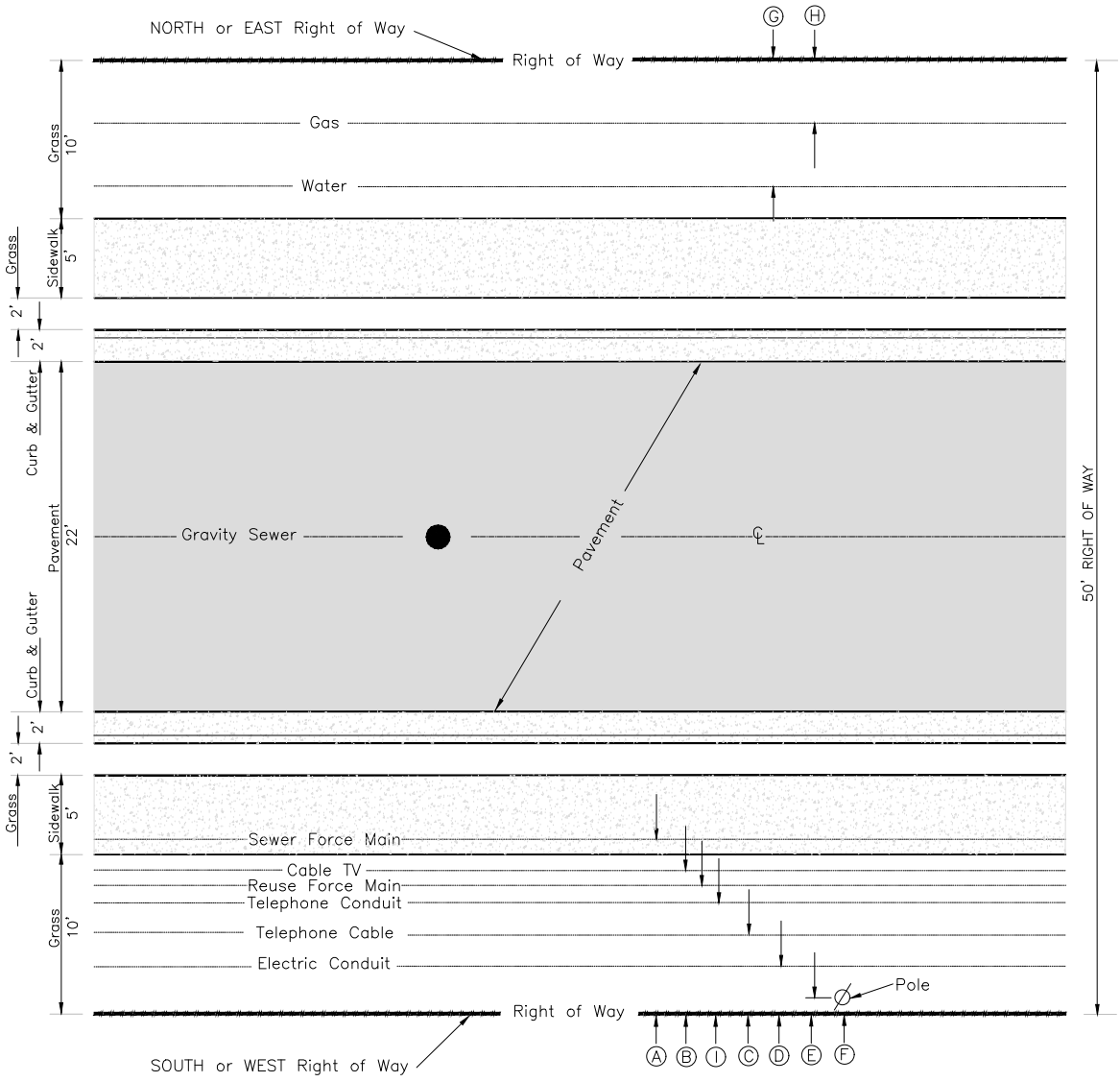

DATE REVISED: *DECEMBER18,2012*

SECTION 478–1.3

Water & Sewer Department
Utilities Division
(352) 351–6772

CITY OF OCALA
STANDARD DETAIL

TYPICAL UTILITY LOCATIONS
IN 60' RIGHT OF WAY
WITH CURB & GUTTER

B

SHT 1 OF 1

UTILITY	DIMENSION SYMBOL	LOCATION	UNDERGROUND DEPTH
Force Main	A	11'	48"
Cable TV	B	9'	24"
Telephone Conduit	C	7'	30"
Telephone Cable	D	5'	30"
Electric Conduit	E	3'	36"
Pole	F	1'	
Sanitary Sewer		CENTER	Varies
Water	G	8'	48"
Gas	H	4'	36"
Reuse FM	I	–	48"

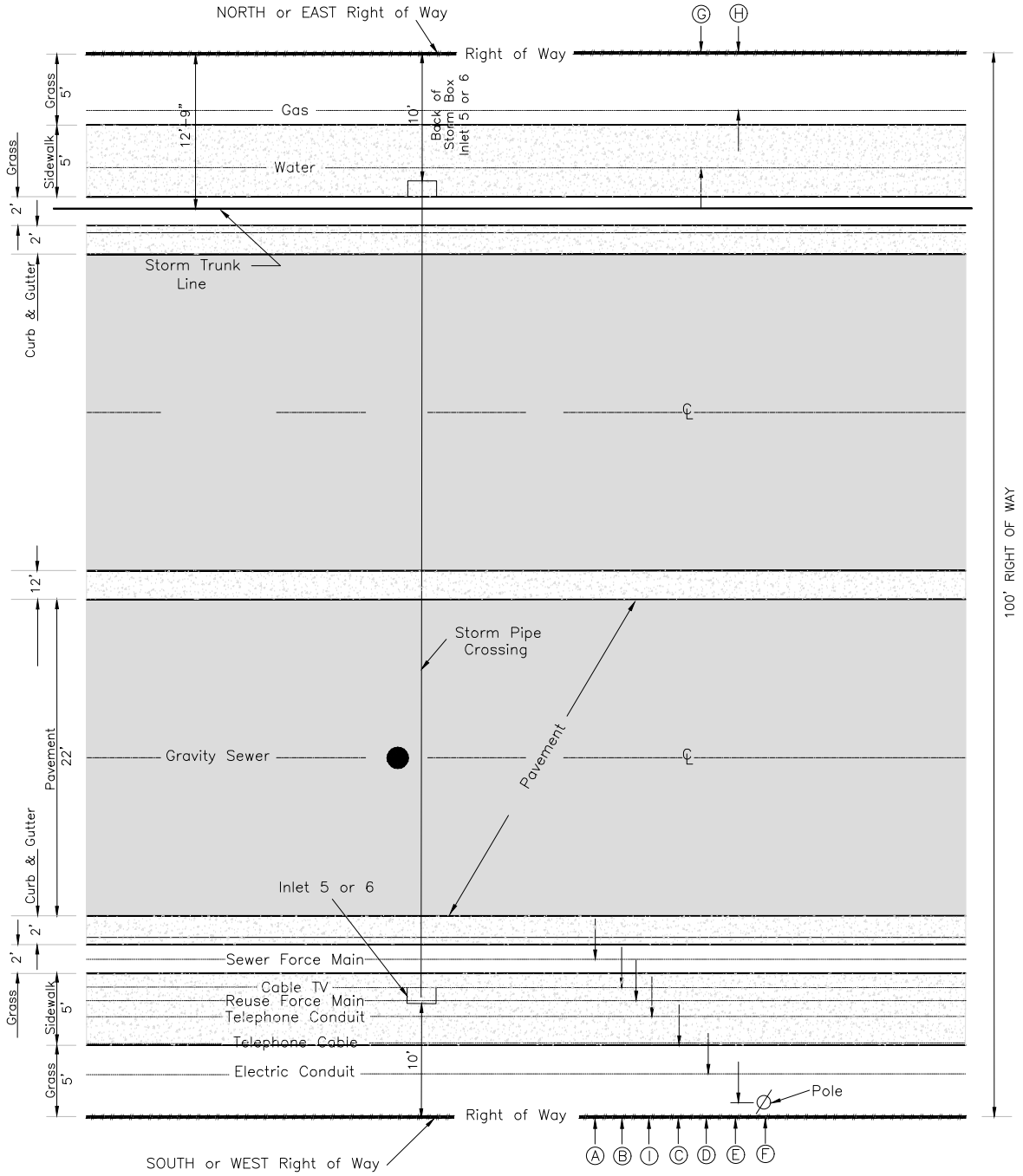

DATE REVISED: *FEBRUARY 6, 2013*

SECTION 478-1.3

Water & Sewer Department
Utilities Division
(352) 351-6772

CITY OF OCALA
STANDARD DETAIL

TYPICAL UTILITY LOCATIONS IN 100' RIGHT OF WAY WITH CURB AND GUTTER

C

SHT 1 OF 1

LOCATION OF PUBLIC WATER SYSTEM MAINS IN ACCORDANCE WITH F.A.C. RULE 62-555.314

Other Pipe	Horizontal Separation	Crossings (1)	Joint Spacing @ Crossings (Full Joint Centered)
Storm Sewer, Stormwater Force Main, Reclaimed Water (2)	Water Main 3 ft. minimum	Water Main 12 inches is the minimum, except for storm sewer, then 6 inches is the minimum and 12 inches is preferred	Alternate 3 ft. minimum Water Main
Vacuum Sanitary Sewer	Water Main 10 ft. preferred 3 ft. minimum	Water Main 12 inches preferred 6 inches minimum	Alternate 3 ft. minimum Water Main
Gravity or Pressure Sanitary Sewer, Sanitary Sewer Force Main, Reclaimed Water (4)	Water Main 10 ft. preferred 6 ft. minimum (3)	Water Main 12 inches is the minimum, except for gravity sewer, then 6 inches is the minimum and 12 inches is preferred	Alternate 6 ft. minimum Water Main
On-Site Sewage Treatment & Disposal System	10 ft. minimum		

(1) Water main should cross above other pipe. When water main must be below other pipe, the minimum separation is 12 inches.
(2) Reclaimed water regulated under Part III of Chapter 62-610, F.A.C.
(3) 3 Ft. for gravity sanitary sewer where the bottom of the water main is laid at least 6 inches above the top of the gravity sanitary sewer.
(4) Reclaimed water not regulated under Part III of Chapter 62-610, F.A.C.

Disclaimer - This document is provided for your convenience only. Please refer to F.A.C. Rule 62-555.314 for additional construction requirements.

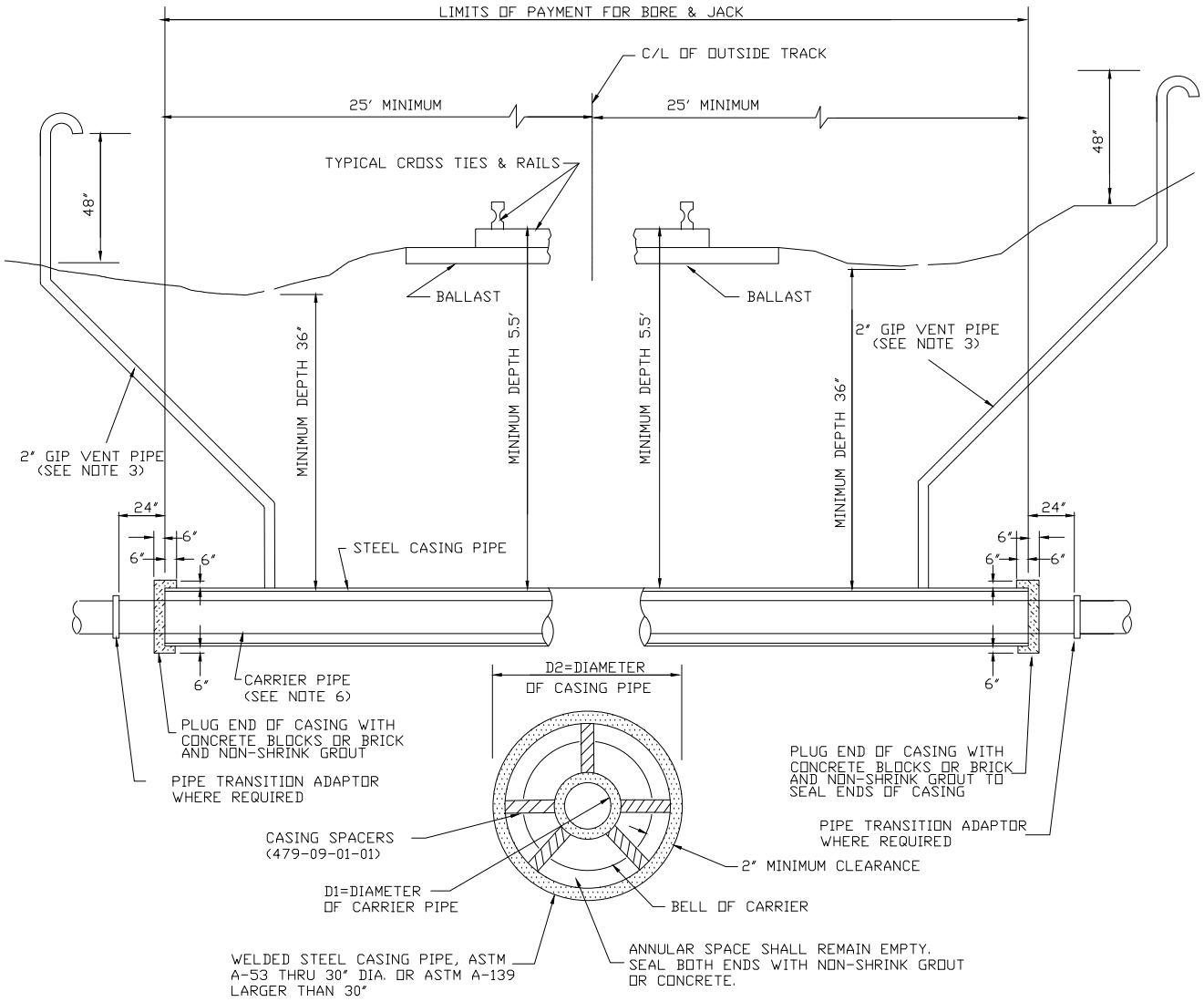

CARRIER PIPE AND CASING PIPE SIZES (MIN)													
CARRIER PIPE NOMINAL DIAMETER (D1)	4	6	8	10	12	14	16	18	20	24	30	36	42
CASING PIPE NOMINAL DIA (D2)	18	18	18	24	24	30	30	36	36	48	48	54	60
WALL THICKNESS-INCHES	0.31	0.31	0.31	0.33	0.33	0.38	0.38	0.42	0.42	0.52	0.52	0.58	0.61

NOTES

1. ALL REQUIREMENTS OF THE RAILROAD AS SPECIFIED BY THE AMERICAN RAILWAY ENGINEERING ASSOCIATION AND THE RAILROAD COMPANY SHALL BE ADHERED TO WHEN CROSSING RAILROADS. THE MORE STRINGENT REQUIREMENTS BETWEEN THE R/R AND THE CITY OF OCALA SHALL GOVERN IN ALL CASES.
2. THE INSIDE DIAMETER OF THE CASING SHALL BE A MINIMUM OF 6" GREATER THAN THE OUTSIDE DIAMETER OF THE CARRIER PIPE BELL OR COUPLING.
3. CASING FOR THE FORCE MAIN AND GRAVITY SEWER SHALL BE INSTALLED WITH A 2" VENT PIPE, WHERE REQUIRED, AT ONE END EXTENDING NOT LESS THAN 4' ABOVE GROUND SURFACE, AND ABOVE THE MAXIMUM ELEVATION OF HIGH WATER. THE TOP OF THE VENT PIPE SHALL BE FITTED WITH DOWN TURNED ELBOW PROPERLY SCREENED. THE VENT PIPE SHALL BE SCHEDULE NO. 40 GALVANIZED STEEL. VENT PIPE FOR WATER MAIN AND REUSE MAIN CASING IS NOT REQUIRED.
4. PAYMENT FOR BORE AND JACK SHALL INCLUDE CASING, END ENCASEMENTS, CARRIER PIPE, TRANSITION ADAPTORS, VENT PIPES AND SPACERS.
5. INSTALL CASING SPACERS TO PROVIDE A MINIMUM OF THREE PER JOINT OF PIPE. INSTALL IN ACCORDANCE WITH THE MANUFACTURER'S WRITTEN INSTRUCTIONS.
6. WATER MAIN, FORCE MAIN, AND REUSE MAIN PIPING INSIDE CASING IS TO BE RESTRAINED JOINT PIPING AS SPECIFIED IN 489-07-02-02, 489-07-08-03, 499-07-15-02, 499-07-99-06, 509-07-02-02, 509-07-08-03.

DATE REVISED: *AUGUST 7, 2012*			SECTION 478-2.1
Water & Sewer Department Utilities Division (352) 351-6772	CITY OF OCALA STANDARD DETAIL	RAILROAD BORING& JACKING BORING & JACKING	A SHT 1 OF 1

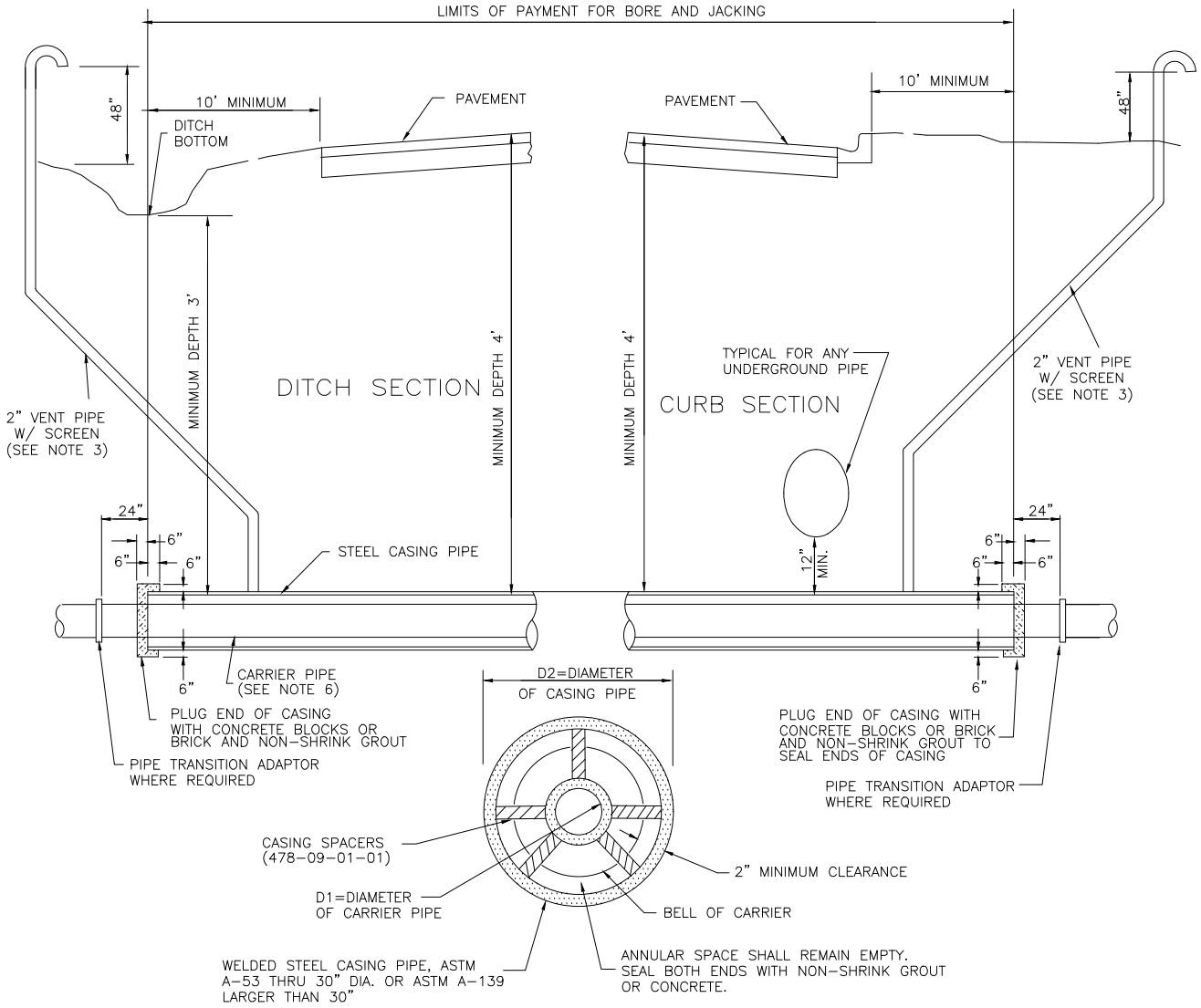

CARRIER PIPE AND CASING PIPE SIZES (MIN)													
CARRIER PIPE NOMINAL DIAMETER (D1)	4	6	8	10	12	14	16	18	20	24	30	36	42
CASING PIPE NOMINAL DIA (D2)	18	18	18	24	24	30	30	36	36	48	48	54	60
WALL THICKNESS-INCHES	0.31	0.31	0.31	0.33	0.33	0.38	0.38	0.42	0.42	0.52	0.52	0.58	0.61

NOTES

1. ALL REQUIREMENTS OF DOT AS SPECIFIED IN THE DOT "UTILITY ACCOMMODATION GUIDE" SHALL BE ADHERED TO WHEN CROSSING HIGHWAYS. THE MORE STRINGENT REQUIREMENTS BETWEEN THE DOT AND THE CITY OF OCALA SHALL GOVERN IN ALL CASES OF CONFLICT.
2. THE INSIDE DIAMETER OF THE CASING SHALL BE A MINIMUM OF 6" GREATER THAN THE OUTSIDE DIAMETER OF THE CARRIER PIPE BELL OR COUPLING.
3. CASING FOR THE FORCE MAIN & GRAVITY SEWER CROSSING SHALL BE INSTALLED WITH A 2" VENT PIPE, WHERE REQUIRED, AT ONE END EXTENDING NOT LESS THAN 4' ABOVE GROUND SURFACE, AND ABOVE THE MAXIMUM ELEVATION OF HIGH WATER. THE TOP OF THE VENT PIPE SHALL BE FITTED WITH DOWN TURNED ELBOW PROPERLY SCREENED. THE VENT PIPE SHALL BE SCHEDULE NO. 80 GALVANIZED STEEL. VENT PIPE FOR WATER MAIN AND REUSE MAIN CASINGS IS NOT REQUIRED.
4. PAYMENT FOR BORE AND JACK SHALL INCLUDE CASING, END ENCASEMENTS, CARRIER PIPE, TRANSITION ADAPTORS, VENT PIPE AND SPACERS.
5. INSTALL CASING SPACERS TO PROVIDE A MINIMUM OF THREE PER JOINT OF PIPE. INSTALL IN ACCORDANCE WITH MANUFACTURERS WRITTEN INSTRUCTIONS.
6. WATER MAIN, FORCE MAIN AND REUSE MAIN PIPING INSIDE CASING IS TO BE RESTRAINED JOINT PIPING AS SPECIFIED IN 489-07-02-02, 489-07-08-03, 499-07-15-02, 499-07-99-06, 509-07-02-02, 509-07-08-03.

DATE REVISED: *SEPTEMBER 25, 2007*			SECTION 478-2.1
Water & Sewer Department Utilities Division (352) 351-6772	CITY OF OCALA STANDARD DETAIL	D.O.T. HIGHWAY BORING AND JACKING BORING & JACKING	B SHT 1 OF 1

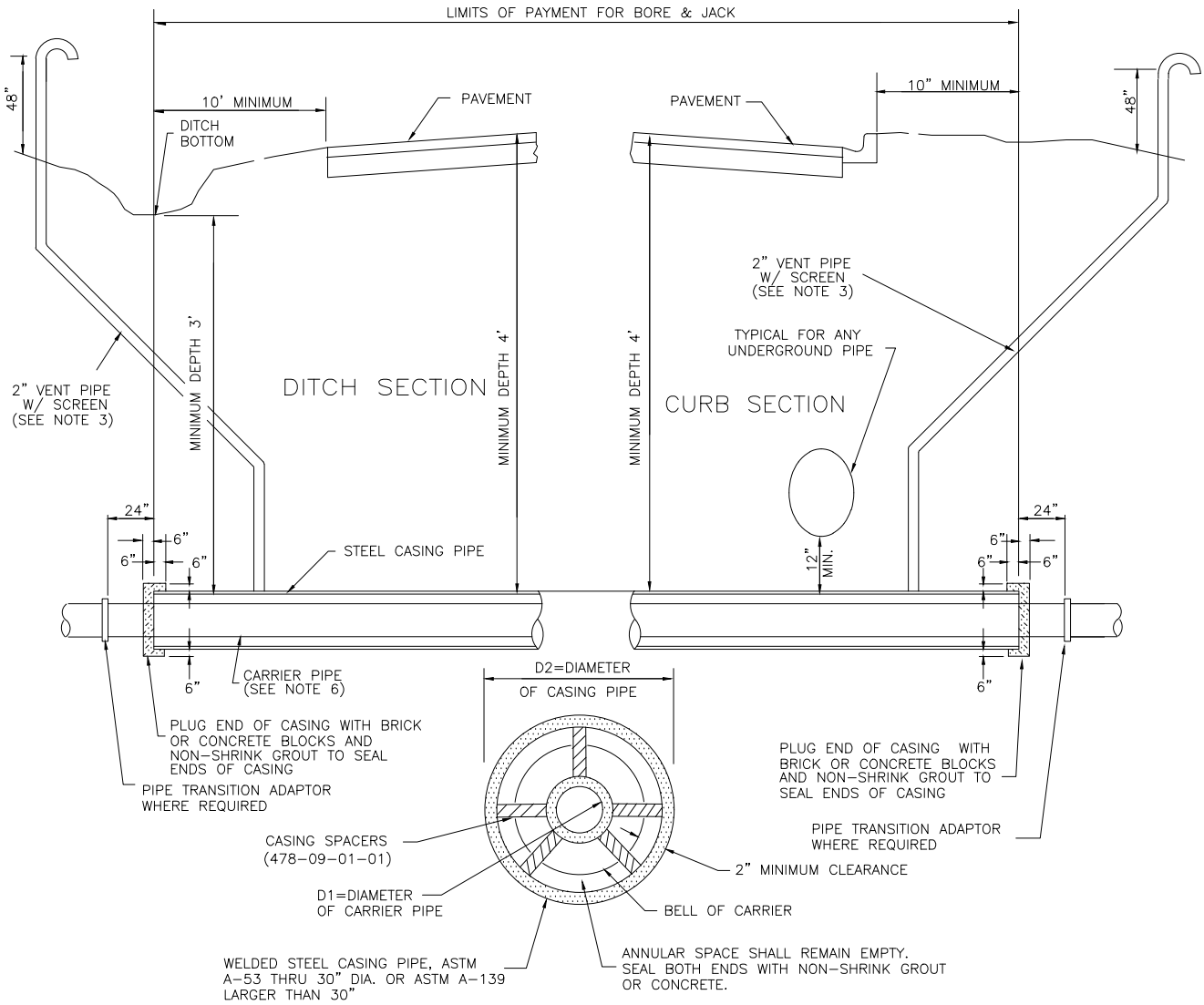

CARRIER PIPE AND CASING PIPE SIZES (MIN)													
CARRIER PIPE NOMINAL DIAMETER (D1)	4	6	8	10	12	14	16	18	20	24	30	36	42
CASING PIPE NOMINAL DIA (D2)	18	18	18	24	24	30	30	36	36	48	48	54	60
WALL THICKNESS-INCHES	0.31	0.31	0.31	0.33	0.33	0.38	0.38	0.42	0.42	0.52	0.52	0.58	0.61

NOTES

1. ALL REQUIREMENTS OF DOT AS SPECIFIED IN THE DOT "UTILITY ACCOMMODATION GUIDE" SHALL BE ADHERED TO WHEN CROSSING HIGHWAYS. THE MORE STRINGENT REQUIREMENTS BETWEEN THE DOT AND THE CITY OF OCALA SHALL GOVERN IN ALL CASES OF CONFLICT.
2. THE INSIDE DIAMETER OF THE CASING SHALL BE A MINIMUM OF 6" GREATER THAN THE OUTSIDE DIAMETER OF THE CARRIER PIPE BELL OR COUPLING.
3. CASING FOR THE FORCE MAIN AND GRAVITY SEWER SHALL BE INSTALLED WITH A 2" VENT PIPE, WHERE REQUIRED, AT ONE END EXTENDING NOT LESS THAN 4' ABOVE GROUND SURFACE, AND ABOVE THE MAXIMUM ELEVATION OF HIGH WATER. THE TOP OF THE VENT SHALL BE FITTED WITH DOWN TURNED ELBOW PROPERLY SCREENED. THE VENT PIPE SHALL BE SCHEDULE NO. 80 GALVANIZED STEEL. VENT PIPE FOR WATER MAIN AND REUSE MAIN CASINGS IS NOT REQUIRED.
4. PAYMENT FOR BORE AND JACK SHALL INCLUDE CASING, END ENCASEMENTS, CARRIER PIPE, TRANSITION ADAPTORS, VENT PIPES AND SPACERS.
5. INSTALL CASING SPACERS TO PROVIDE A MINIMUM OF THREE PER JOINT OF PIPE. INSTALL IN ACCORDANCE WITH MANUFACTURER'S WRITTEN INSTRUCTIONS.
6. WATER MAIN, FORCE MAIN, AND REUSE MAIN PIPING INSIDE CASING IS TO BE RESTRAINED JOINT PIPING AS SPECIFIED IN DETAIL 489-07-02-02, 489-07-08-03, 499-07-15-02, 499-07-99-06, 509-07-02-02, 509-07-08-03.

DATE REVISED: *AUGUST 7, 2012*			SECTION 478-2.1
Water & Sewer Department Utilities Division (352) 351-6772	CITY OF OCALA STANDARD DETAIL	MARION COUNTY HIGHWAY BORING AND JACKING BORING & JACKING	C SHT 1 OF 1

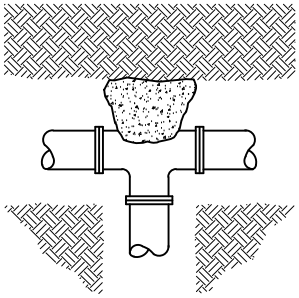

TEE

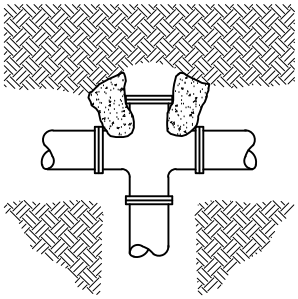

PLUGGED CROSS (1)

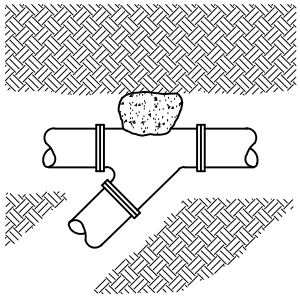

WYE

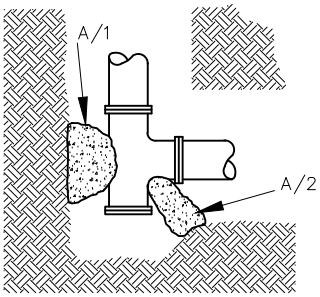

PLUGGED TEE

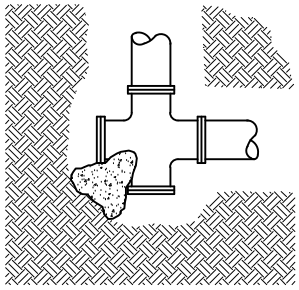

PLUGGED CROSS (2)

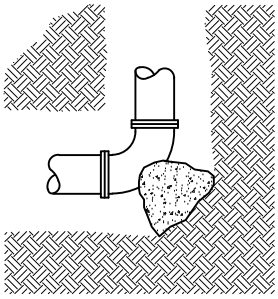

BEND

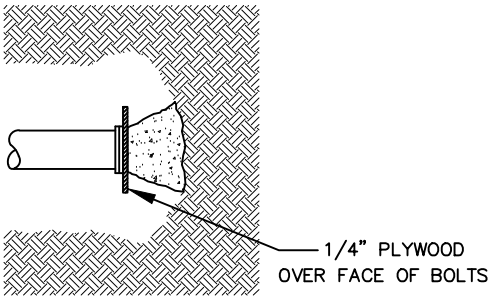

PLUG

NOTES :

1. BEARING AREA OF THRUST BLOCK SHALL NOT BE LESS THAN 1.0 SQ. FT. BEARING AREA SHALL HAVE EQUAL HEIGHT AND WIDTH.
2. ALLOWABLE SOIL BEARING STRESS IS 2000 LBS./SQ. FT.
3. BEARING AREAS, VOLUMES, AND SPECIAL BLOCKING DETAILS SHOWN ON PLANS TAKE PRECEDENCE OVER THIS STANDARD. THRUST BLOCKS FOR VERTICAL BENDS HAVING DOWNWARD RESULTANT THRUSTS SHALL BE THE SAME AS FOR HORIZONTAL BENDS. BEARING AREAS FOR HORIZONTAL BEND THRUST BLOCKS ARE BASED ON TEST PRESSURE OF 150 PSIG, AND AN ALLOWABLE SOIL BEARING STRESS OF 2000 LBS./SQ. FT. TO COMPUTE BEARING AREAS FOR DIFFERENT TEST PRESSURES AND SOIL BEARING STRESSES, MULTIPLY TABLE VALUES BY THE FACTOR (P'/S'_g). WHERE: P'= ACTUAL TEST PRESSURE, PSIG S'_g = ACTUAL OR BEARING PRESSURE, PSF.

DATE REVISED: *JANUARY 30, 2003*			SECTION 478-3.1
Water & Sewer Department Utilities Division (352) 351-6772	CITY OF OCALA STANDARD DETAIL	THRUST BLOCKS CAST IN PLACE	A SHT 1 OF 2

NOTES :

4. REQUIRED VOLUMES OR BEARING AREAS AT FITTINGS SHALL BE AS INDICATED BELOW, ADJUSTED, IF NECESSARY, TO CONFORM TO THE TEST PRESSURE(S) AND ALLOWABLE SOIL BEARING STRESS(ES) STATED IN THE SPECIFICATIONS.
5. KEEP CONCRETE CLEAR OF JOINT AND JOINT ACCESSORIES.
6. ALL PLUGS, CAPS, TEES, AND BENDS DEFLECTING 11 DEGREES OR MORE ON MAINS 2 INCHES IN DIAMETER OR LARGER SHALL BE PROVIDED WITH SUITABLE ANCHORAGE CONSISTING OF THRUST BLOCKS OR RESTRAINED JOINTS. ALL RESTRAINED JOINT LENGTHS AS SPECIFIED IN THE TABLE ARE FOR ONE RESTRAINT DIRECTION. ALL PIPING TRANSITIONS SHALL BE RESTRAINED IN BOTH DIRECTIONS.

BEARING AREA OF THRUST BLOCKS IN SQ. FT.
(HORIZONTAL BENDS)

FITTING SIZE	TEE, WYE, PLUG, OR CAP	90° BEND PLUGGED CROSS	TEE PLUGGED RUN		BEND ANGLE		
			A_1	A_2	45°	22½°	11¼°
4	1.0	1.4	1.9	1.4	1.0		
6	2.1	3.0	4.3	3.0	1.6	1.0	
8	3.8	5.3	7.6	5.4	2.9	1.5	1.0
10	5.9	8.4	11.8	8.4	4.6	2.4	1.2
12	8.5	12.0	17.0	12.0	6.6	3.4	1.7
14	11.5	16.3	23.0	16.3	8.9	4.6	2.3
16	15.0	21.3	30.0	21.3	11.6	6.0	3.0
18	19.0	27.0	38.0	27.0	14.6	7.6	3.8
20	23.5	33.3	47.0	33.3	18.1	9.4	4.7
24	34.0	48.0	68.0	48.0	26.2	13.6	6.8

VOLUME OF THRUST BLOCKS IN CU. YD.

FITTING SIZE	TEE, WYE, PLUG, OR CAP	90° BEND PLUGGED CROSS	TEE PLUGGED RUN		BEND ANGLE		
			A_1	A_2	45°	22½°	11¼°
4	0.075	0.075	0.075	0.075	0.075	0.075	0.075
6	0.10	0.15	0.350	0.250	0.090	0.075	0.075
8	0.25	0.35	0.575	0.400	0.100	0.15	0.075
10	0.45	0.60	1.00	0.60	0.350	0.20	0.10
12	0.75	1.00	1.75	1.25	0.500	0.25	0.15
14	1.25	1.50	2.00	1.75	0.750	0.35	0.25
16	1.65	2.00	3.00	2.00	1.100	0.50	0.35
18	2.25	2.75	4.00	2.75	1.750	0.80	0.45
20	3.50	4.25	5.50	4.25	2.50	1.30	0.70
24	5.00	6.00	7.50	6.00	4.00	2.00	1.00

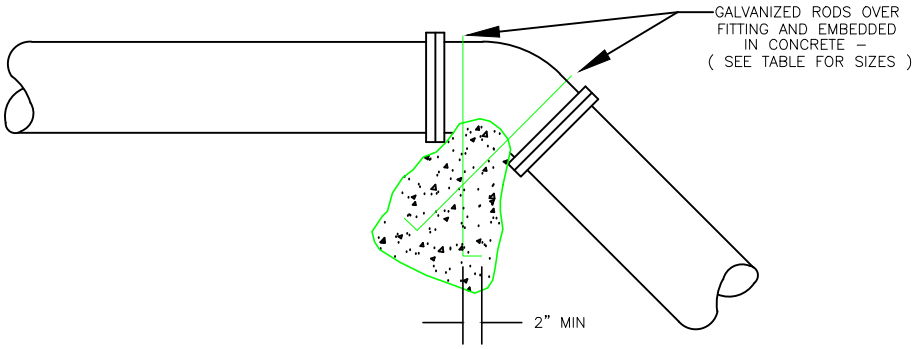

VOLUME OF THRUST BLOCK IN CUBIC FEET (VERTICAL BENDS)			
FITTING SIZE	BEND ANGLE		
	45°	22½°	11¼°
4	1.1	0.4	0.2
6	2.7	1.0	0.4
8	4.0	1.5	0.6
10	6.0	2.3	0.9
12	8.5	3.2	1.3
14	11.5	4.3	1.8
16	14.8	5.6	2.3

ANCHOR ROD SIZES		
FITTING SIZE	ROD SIZE	EMBEDMENT
12" OR LESS	#6	30"
14" – 16"	#8	36"

NOTES :

1. THRUST BLOCK VOLUMES FOR VERTICAL BENDS HAVING UPWARD RESULTANT THRUSTS ARE BASED ON TEST PRESSURE OF 150 PSIG AND THE WEIGHT OF CONCRETE – 4050 LBS./ CU. YD. TO COMPUTE VOLUMES FOR DIFFERENT TEST PRESSURES, USE THE FOLLOWING EQUATION : VOLUME = (TEST PRESSURE / 150 x TABLE VALUE) .
2. KEEP CONCRETE CLEAR OF JOINT AND JOINT ACCESSORIES.
3. THRUST BLOCKS FOR VERTICAL BENDS HAVING DOWNWARD RESULTANT THRUSTS SHALL BE THE SAME AS FOR HORIZONTAL BENDS.
4. BEARING AREA VOLUMES, AND SPECIAL BLOCKING DETAILS SHOWN ON THE PLANS TAKE PRECEDENCE OVER THE STANDARD.

DATE REVISED: *JANUARY 30, 2003*			SECTION 478-3.1
Water & Sewer Department Utilities Division (352) 351-6772	CITY OF OCALA STANDARD DETAIL	THRUST BLOCKS ANCHORED	B SHT 1 OF 1

THRUST RESTRAINT TABLE FOR DIP HORIZONTAL FITTINGS					
NOMINAL PIPE DIAMETER	TEE, 90 BEND	45 BEND	22.5 BEND	11.25 BEND	PLUG
4–6	40'	20'	20'	20'	80'
8	60'	40'	20'	20'	100'
12	80'	40'	20'	20'	140'
16	120'	60'	40'	20'	180'
18	140'	80'	40'	20'	220'
24–30	160'	80'	40'	20'	300'
36	180'	80'	40'	20'	360'

NOTES

1. MINIMUM RESTRAINED LENGTH SHALL BE ALWAYS 20 FEET.
2. IN LINE VALVES AND THROUGH RUN OF TEES OUTSIDE LIMITS OF RESTRAINED JOINTS FROM OTHER FITTINGS NEED NOT BE RESTRAINED UNLESS OTHERWISE INDICATED ON THE DRAWINGS.

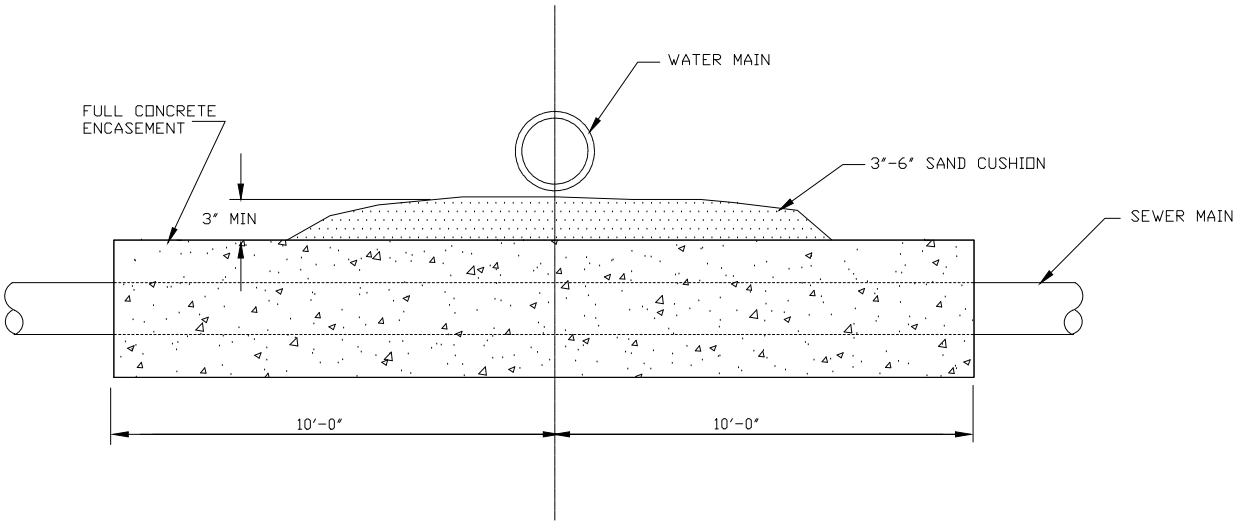

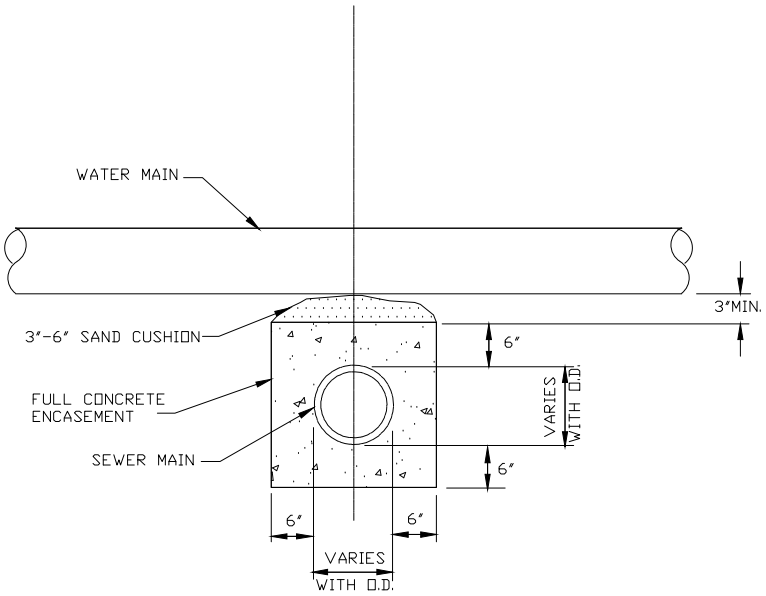

NOTES

1. USE CONCRETE ENCASEMENT WHERE VERTICAL CLEARANCE BETWEEN WATERMAIN AND SEWER IS 12" OR LESS.
2. WHEN CROSSING SEWER ONE FULL JOINT OF WATER MAIN SHALL BE CENTERED OVER THE SEWER MAIN.
3. CONCRETE FOR ENCASEMENT SHALL BE 3000 PSI.

DATE REVISED: *JANUARY 21, 2009*			SECTION 478-3.3
Water & Sewer Department Utilities Division (352) 351-6772	CITY OF OCALA STANDARD DETAIL	CONCRETE ENCASEMENT CONCRETE ENCASEMENT	A SHT 1 OF 1

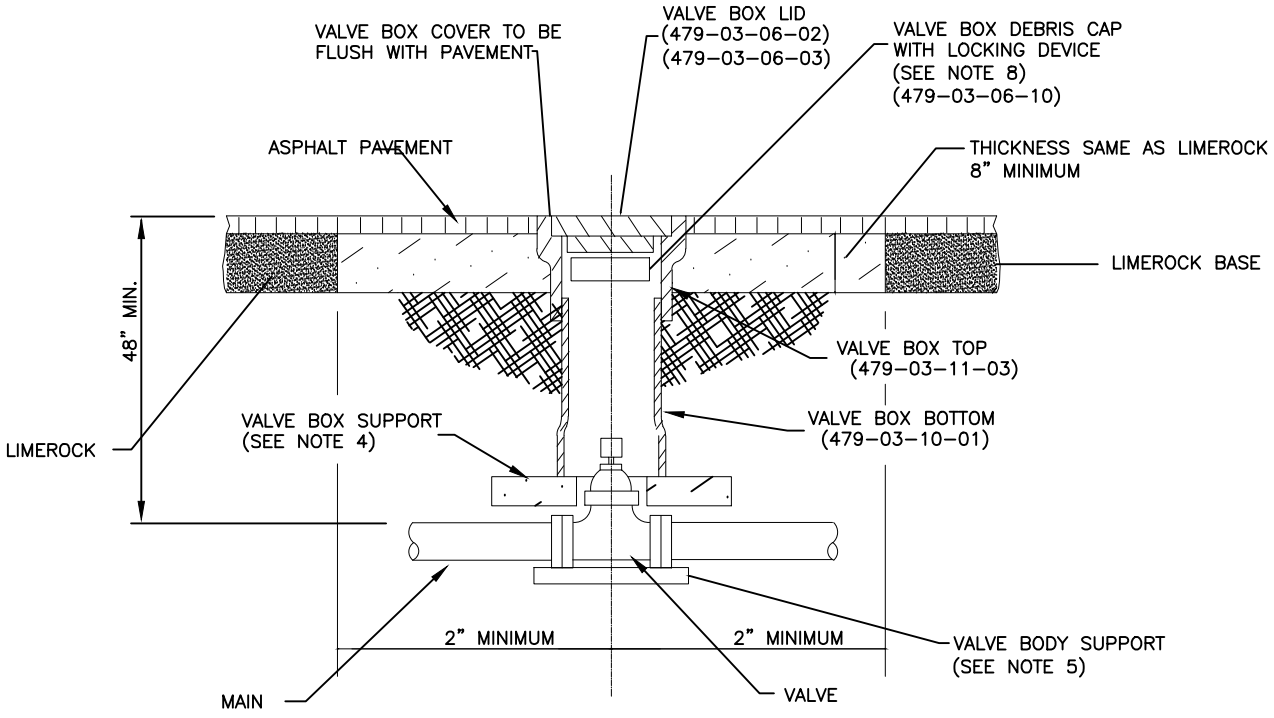

NOTES

1. WHERE ONE VALVE BOX EXTENSION IS REQUIRED USE STANDARD VALVE BOX EXTENSION 479-03-11-02.
2. WHERE MORE THAN ONE VALVE BOX EXTENSIONS ARE REQUIRED USE 6" D.I.P. CUT TO PROPER LENGTH SO VALVE BOX BOTTOM IS ONE CONTINUOUS SECTION.
3. VALVE BOX LID TO BE FURNISHED WITH THE WORD "WATER", FOR WATER MAIN INSTALLATION, "SEWER" FOR FORCE MAIN INSTALLATION, "REUSE" FOR REUSE MAIN INSTALLATION, OR "FIRE" FOR DEDICATED FIRE MAIN INSTALLATION.
4. FOR ALL VALVES USE FOUR (4) OR FIVE (5) SOLID COMMON BRICKS LAID FLAT.
5. 4"x 8" x16" SOLID PRECAST CONCRETE BLOCK TO BE INSTALLED UNDERNEATH VALVE BODY FOR SUPPORT
6. FLOWABLE FILL OR CONCRETE CAN BE USED IN LIEU OF LIMEROCK IF APPROVED BY THE WATER AND SEWER ENGINEER.
7. FOR ALL VALVE BOXES INSTALLED IN PAVEMENT USE NON-POP LID (479-03-06-03).
8. FOR ALL NEW VALVE INSTALLATIONS WHERE VALVE IS INSTALLED AT CONNECTION POINT TO AN EXISTING CITY WATER MAIN, INSTALL VALVE BOX DEBRIS CAP WITH LOCKING DEVICE IN VALVE BOX UNTIL WATER MAIN IS CLEARED.
9. FOR PVC & HDPE WATER MAINS, TERMINATE LOCATE WIRE INSIDE VALVE BOX, SEE DETAIL 478-7.1A.

DATE REVISED: *APRIL 1, 2011*			SECTION 478-4.1
Water & Sewer Department Utilities Division (352) 351-6772	CITY OF OCALA STANDARD DETAIL	VALVE BOX INSTALLATION TRAFFIC AREA IN PAVEMENT	A SHT 1 OF 1

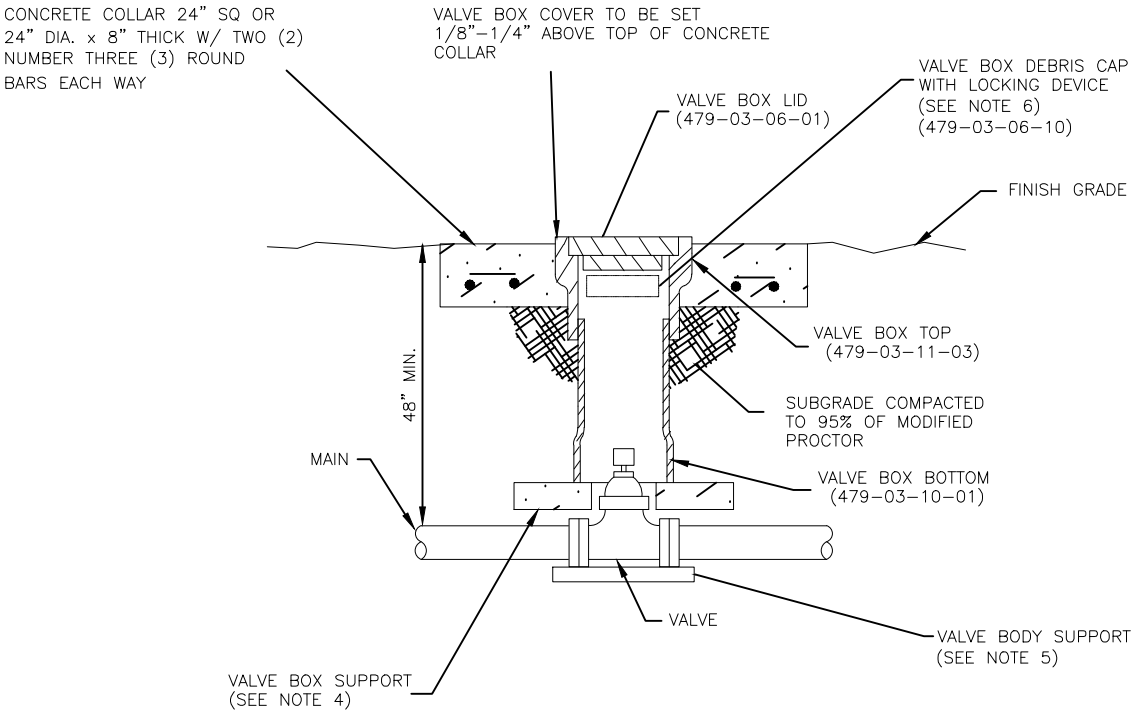

NOTES

1. WHERE ONE VALVE BOX EXTENSION IS REQUIRED USE STANDARD VALVE BOX EXTENSIONS 479–03–11–02.
2. WHERE MORE THAN ONE VALVE BOX EXTENSIONS ARE REQUIRED USE 6" D.I.P. CUT TO PROPER LENGTH SO VALVE BOX BOTTOM IS CONTINUOUS SECTION.
3. VALVE BOX LID TO BE FURNISHED WITH THE WORD "WATER". FOR WATER MAIN INSTALLATION "SEWER" FOR FORCE MAIN INSTALLATION, "REUSE" FOR REUSE MAIN INSTALLATION, OR "FIRE" FOR DEDICATED FIRE MAIN INSTALLATION.
4. FOR ALL VALVES USE FOUR (4) OR FIVE (5) SOLID COMMON BRICKS LAID FLAT.
5. 4"x 8"x 16" SOLID PRECAST CONCRETE BLOCK TO BE INSTALLED UNDERNEATH VALVE BODY FOR SUPPORT.
6. FOR ALL NEW VALVE INSTALLATIONS WHERE VALVE IS INSTALLED AT CONNECTION POINT TO AN EXISTING CITY WATER MAIN, INSTALL VALVE BOX DEBRIS CAP WITH LOCKING DEVICE IN VALVE BOX UNTIL WATER MAIN IS CLEARED.
7. FOR PVC & HDPE WATER MAINS, TERMINATE LOCATE WIRE INSIDE VALVE BOX, SEE DETAIL 478–7.1A.

DATE REVISED: *APRIL 1, 2011*			SECTION 478–4.1
Water & Sewer Department Utilities Division (352) 351–6772	CITY OF OCALA STANDARD DETAIL	VALVE BOX INSTALLATION TRAFFIC AREA NOT IN PAVEMENT	B SHT 1 OF 1

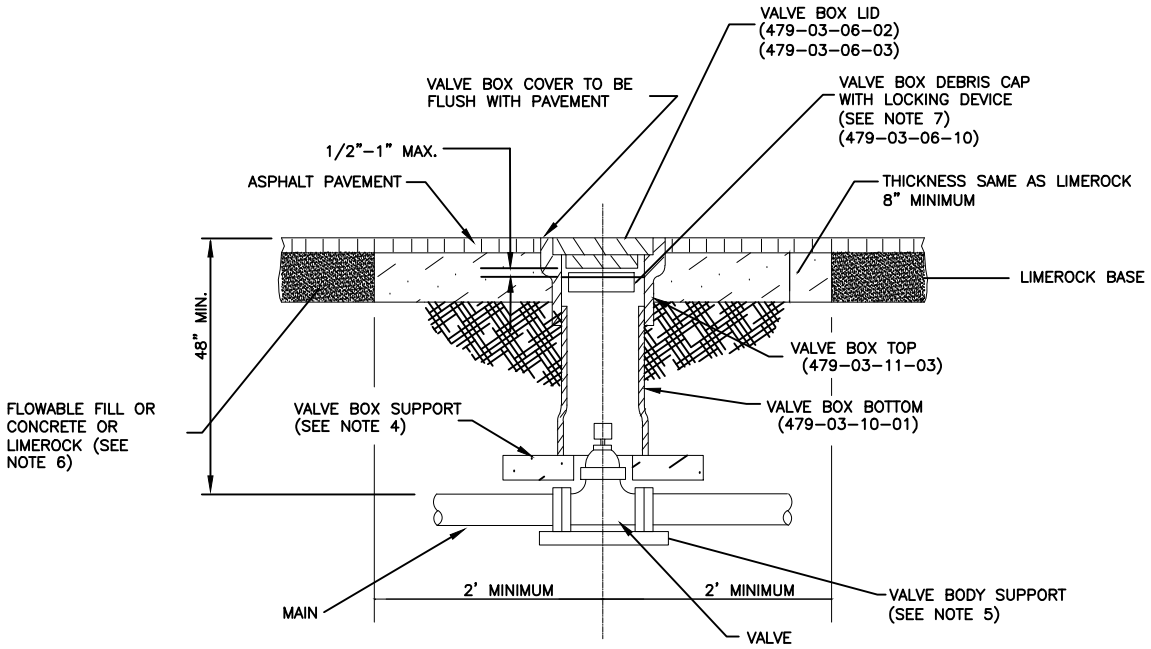

NOTES

1. WHERE ONE VALVE BOX EXTENSION IS REQUIRED USE STANDARD VALVE BOX EXTENSION 479-03-11-02.
2. WHERE MORE THAN ONE VALVE BOX EXTENSIONS ARE REQUIRED USE 6" D.I.P. CUT TO PROPER LENGTH SO VALVE BOX BOTTOM IS ONE CONTINUOUS SECTIONS.
3. VALVE BOX LID TO BE FURNISHED WITH THE WORD "FIRE".
4. FOR ALL VALVES USE FOUR (4) OR FIVE (5) SOLID COMMON BRICKS LAID FLAT.
5. 4"x 8"x 16" SOLID PRECAST CONCRETE BLOCK TO BE INSTALLED UNDERNEATH VALVE BODY FOR SUPPORT.
6. FLOWABLE FILL OR CONCRETE CAN BE PLACED UP TO FINISH LIMEROCK ELEVATION, BOTTOM OF ASPHALT IF APPROVED BY WATER AND SEWER ENGINEER.
7. FOR ALL NEW FIRE LINE VALVE INSTALLATIONS AT JUNCTIONS WITH POTABLE WATER MAINS INSTALL VALVE BOX DEBRIS CAP WITH LOCKING DEVICE. DEBRIS CAP WITH LOCKING DEVICE TO REMAIN IN PLACE AND LOCKED UNTIL REMOVAL IS AUTHORIZED BY CITY FIRE MARSHALL.
8. FOR PVC & HDPE WATER MAINS, TERMINATE LOCATE WIRE INSIDE VALVE BOX, SEE DETAIL 478-7.1A.

DATE REVISED: *APRIL 1, 2011*			SECTION 478-4.2
Water & Sewer Department Utilities Division (352) 351-6772	CITY OF OCALA STANDARD DETAIL	VALVE BOX INSTALLATION FOR FIRE MAIN TRAFFIC AREA IN PAVEMENT	A SHT 1 OF 1

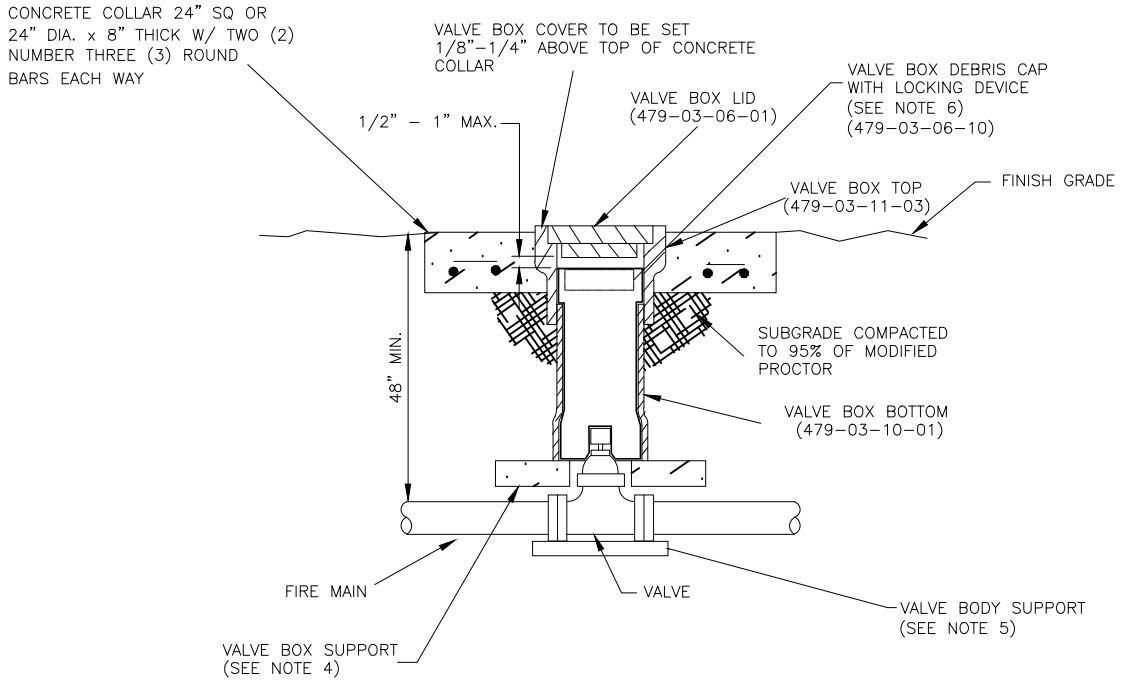

NOTES

1. WHERE ONE VALVE BOX EXTENSION IS REQUIRED USE STANDARD VALVE BOX EXTENSIONS 479-03-11-02.
2. WHERE MORE THAN ONE VALVE BOX EXTENSIONS ARE REQUIRED USE 6" D.I.P. CUT TO PROPER LENGTH SO VALVE BOX BOTTOM IS
3. VALVE BOX LID TO BE FURNISHED WITH THE WORD "FIRE".
4. FOR ALL VALVES USE FOUR (4) OR FIVE (5) SOLID COMMON BRICKS LAID FLAT.
5. 4"x 8"x 16" SOLID PRECAST CONCRETE BLOCK TO BE INSTALLED UNDERNEATH VALVE BODY FOR SUPPORT.
6. FOR ALL NEW FIRE LINE VALVE INSTALLATION AT JUNCTIONS WITH POTABLE WATER MAINS INSTALL VALVE BOX DEBRIS CAP WITH LOCKING DEVICE. DEBRIS CAP WITH LOCKING DEVICE TO REMAIN IN PLACE AND LOCKED UNTIL REMOVAL IS AUTHORIZED BY FIRE MARSHALL.
7. FOR PVC & HDPE WATER MAINS, TERMINATE LOCATE WIRE INSIDE VALVE BOX, SEE DETAIL 478-7.1A.

DATE REVISED: *APRIL 1, 2011*			SECTION 478-4.2
Water & Sewer Department Utilities Division (352) 351-6772	CITY OF OCALA STANDARD DETAIL	VALVE BOX INSTALLATION FOR FIRE MAIN TRAFFIC AREA NOT IN PAVMENT	B SHT 1 OF 1

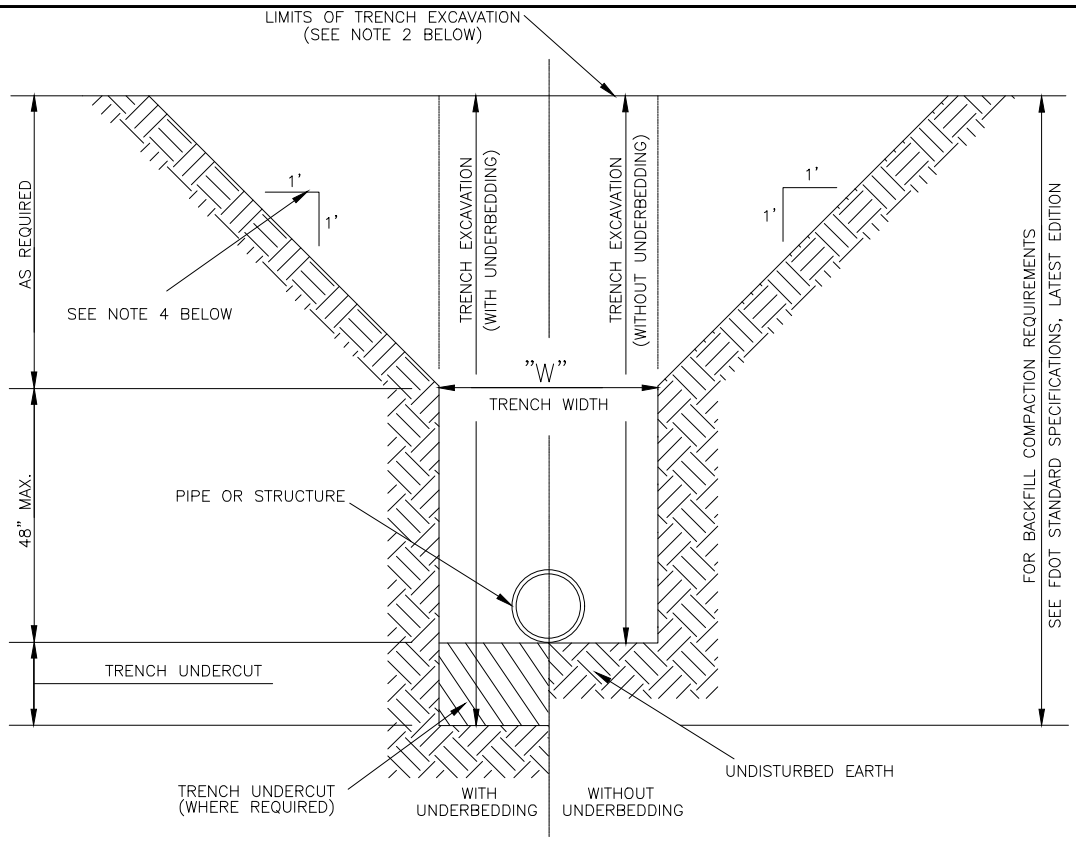

PIPE INSTALLATION

PIPE DIAMETER	2"–7"	8"–16"	17" – 24"	OVER 24"
TRENCH WIDTH "W"	36"	48"	54"	60"

STRUCTURE INSTALLATION

DEPTH OF TRENCH	0' – 6'	6' – 12'	12' – 18'	OVER 18'
STRUCTURE WIDTH "SW"	VARIES	VARIES	VARIES	VARIES
TRENCH WIDTH "W"	SW + 36"	SW + 48"	SW + 54"	SW + 60"

NOTES

1. IN THE EVENT UNSTABLE OR UNSUITABLE BEDDING MATERIAL IS ENCOUNTERED AT OR BELOW THE LIMITS OF EXCAVATION NOTED ON THE DRAWINGS, SUCH MATERIAL SHALL BE REMOVED AND REPLACED WITH FILL APPROVED BY THE WATER AND SEWER ENGINEER.

2. UPPER LIMITS OF TRENCH EXCAVATION AND FOR CALCULATION OF UNSUITABLE MATERIAL REFERS TO ONE OF THE FOLLOWING CONDITIONS (REFER TO DETAIL 478–5.2):
   A. BOTTOM OF LIMEROCK BASE WHERE UNDER A PAVED ROADWAY EXCEPT WHERE A TWO FOOT UNDERCUT BELOW THE ROADWAY BASE IS REQUIRED. SEE "B" BELOW.
   B. BOTTOM OF TWO FOOT UNDERCUT BELOW THE ROADWAY SUBGRADE WHERE CALLED FOR IN THE CONTRACT DOCUMENTS.
   C. FINISH GRADE WHERE NOT UNDER A PAVED ROADWAY.

3. TRENCH WIDTH FOR CALCULATION OF UNSUITABLE MATERIAL IS THE TRENCH WIDTH, THE WIDTH "W" REQUIRED TO INSTALL THE PIPE, PLUS THE TWO TRIANGULAR AREAS BEGINNING FOUR FEET HIGHER THAN THE TRENCH BOTTOM, EXTENDING AWAY FROM THE TRENCH ON A ONE TO ONE SLOPE ON EITHER SIDE OF THE TRENCH TO THE UPPER LIMITS OF THE UNSUITABLE MATERIAL. UNSUITABLE MATERIAL TO BE REMOVED AS PART OF ROADWAY EXCAVATION WILL NOT BE INCLUDED IN THIS CALCULATION.

4. TYPICAL TRENCH SLOPES ARE 1:1 EXCEPT WHERE SOIL CONDITIONS WARRANT DEVIATIONS BUT SHALL BE SUBJECT TO THE DISCRETION OF THE WATER & SEWER ENGINEER OR HIS REPRESENTATIVE. WHERE DEVIATION IS WARRANTED SLOPES ARE IN ACCORDANCE WITH OSHA REQUIREMENTS. FOR PURPOSES OF CALCULATING UNSUITABLE MATERIAL TRENCH SLOPES ARE ASSUMED TO BE 1:1 UNLESS OTHERWISE DIRECTED BY THE ENGINEER.

5. IN DEEP CUTS TRENCH SHORING OR TRENCH BOX SHALL BE USED AS DIRECTED BY THE WATER & SEWER ENGINEER.

DATE REVISED: *MARCH 11, 2011*			SECTION 478-5.1
Water & Sewer Department Utilities Division (352) 351–6772	CITY OF OCALA STANDARD DETAIL	TRENCH EXCAVATION UNSUITABLE MATERIAL	A SHT 1 OF 1

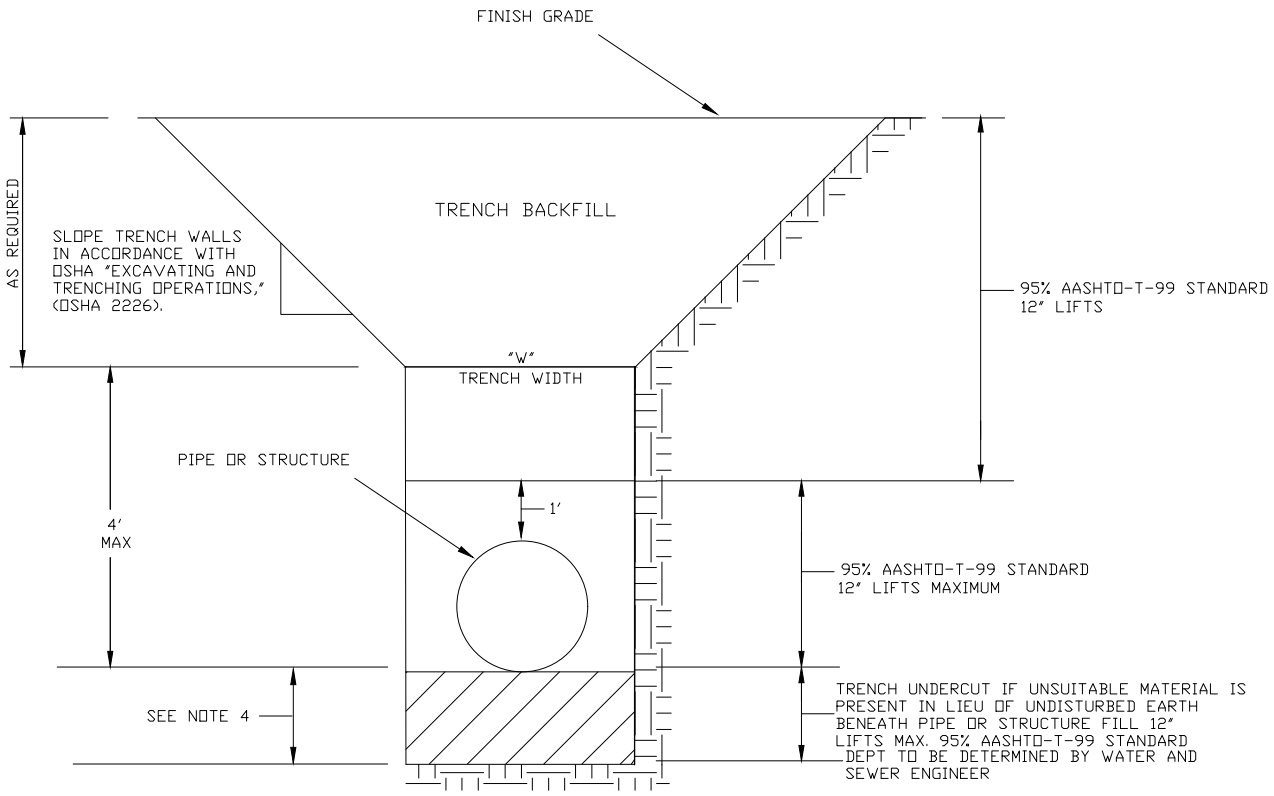

NOTES

1. DENSITY TESTS TO BE TAKEN AT EACH 12" OF COMPACTED FILL, NOT LESS THAN 500 FEET APART AS DIRECTED BY THE WATER AND SEWER ENGINEER, IN ACCORDANCE WITH FDOT STANDARD SPECIFICATIONS, LATEST REVISION.

2. IF THE CONTRACTOR HAS COMPACTION EQUIPMENT WITH WHICH THE REQUIRED DENSITY CAN BE OBTAINED IN THICKER LIFTS THAN PERMITTED ABOVE AND UPON SATISFACTORY EVIDENCE THAT THE PROPOSED EQUIPMENT WILL PRODUCE WORK EQUAL IN QUALITY TO THAT PRODUCED BY THE SPECIFIED METHODS, THE ENGINEER MAY PERMIT PLACEMENT OF GRANULAR MATERIAL SOIL GROUPS A-1, A-2, OR A-3 IN LIFTS UP TO A MAXIMUM OF TWO FOOT COMPACTED THICKNESS. THE CONTRACTOR WILL BE REQUIRED TO FURNISH EQUIPMENT AND LABOR TO EXCAVATE AND BACKFILL TEST PITS TO BE DUG FOR THE PERFORMANCE OF DENSITY TESTS.

3. USE OF THICK LIFT COMPACTION PROCEDURES WILL NOT BE ALLOWED FOR THE FIRST STAGE BACKFILLING (BENEATH THE HAUNCHES) OF PIPE AND ON SIDES OF PIPE.

4. REFER TO PROJECT PLANS AND SPECIFICATIONS AND FDOT STANDARD SPECIFICATIONS FOR ROAD CONSTRUCTION, UNSUITABLE MATERIAL FOR UNDERCUTTING REQUIREMENTS.

5. REFER TO PROJECT PLANS AND SPECIFICATIONS AND FDOT STANDARD SPECIFICATIONS FOR ROAD AND BRIDGE REPLACEMENT.

DATE REVISED: *APRIL 1, 2011*			SECTION 478-5.2
Water & Sewer Department Utilities Division (352) 351-6772	CITY OF OCALA STANDARD DETAIL	TRENCH BACKFILL NOT WITHIN STREET RIGHTS OF WAY	A SHT 1 OF 1

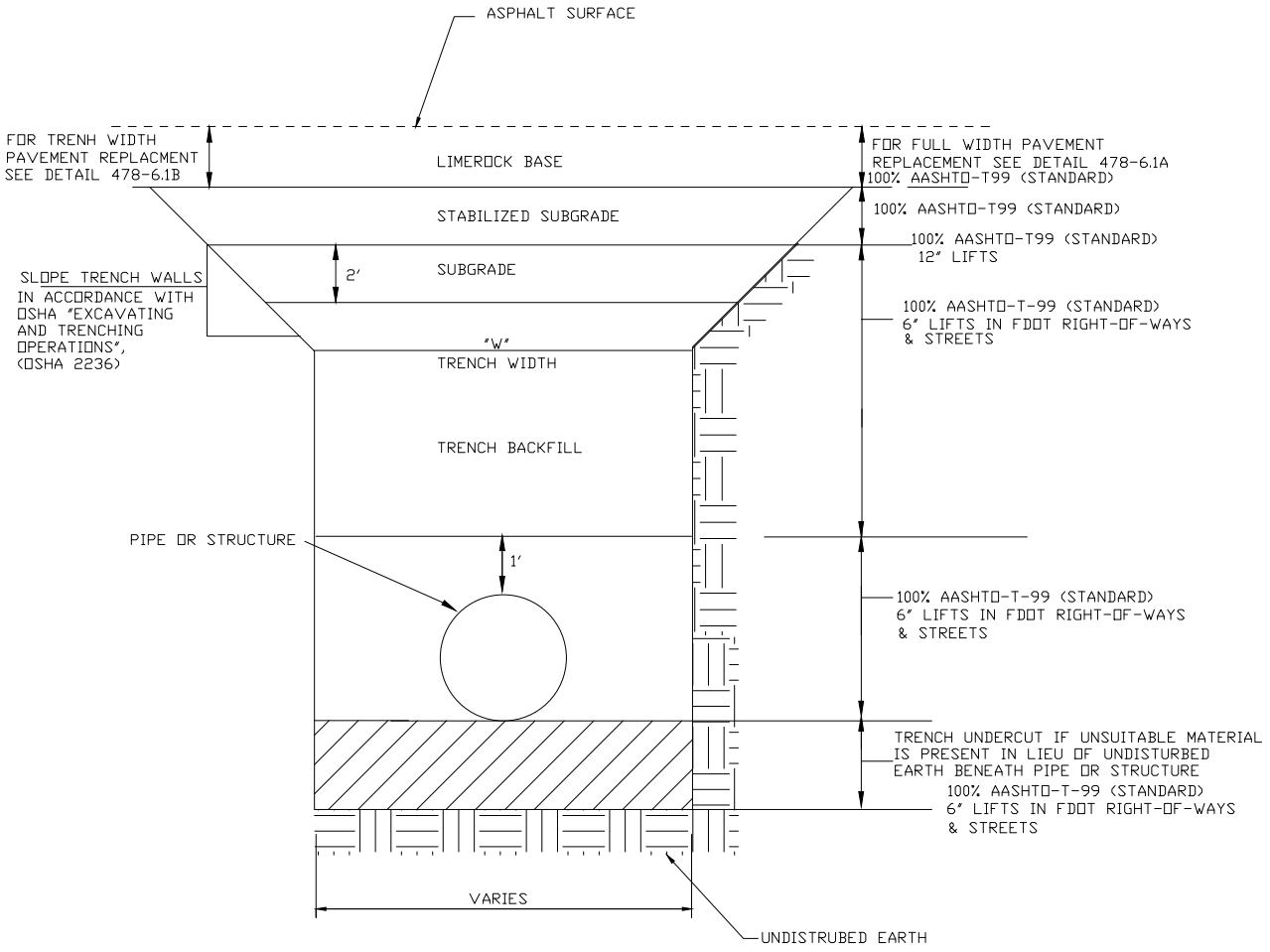

NOTES

1. DENSITY TESTS TO BE TAKEN AT EACH 12" OF COMPACTED FILL, NOT LESS THAN 500 FEET APART AS DIRECTED BY THE WATER AND SEWER ENGINEER, IN ACCORDANCE WITH FDOT MANUAL, LATEST REVISION.

2. IF THE CONTRACTOR HAS COMPACTION EQUIPMENT WITH WHICH THE REQUIRED DENSITY CAN BE OBTAINED IN THICKER LIFTS THAN PERMITTED ABOVE AND UPON SATISFACTORY EVIDENCE THAT THE PROPOSED EQUIPMENT WILL PRODUCE WORK EQUAL IN QUALITY TO THAT PRODUCED BY THE SPECIFIED METHODS, THE ENGINEER MAY PERMIT PLACEMENT OF GRANULAR MATERIAL SOIL GROUPS A-1, A-2, OR A-3 IN LIFTS UP TO A MAXIMUM OF TWO FOOT COMPACTED THICKNESS. THE CONTRACTOR WILL BE REQUIRED TO FURNISH EQUIPMENT AND LABOR TO EXCAVATE AND BACKFILL TEST PITS TO BE DUG FOR THE PERFORMANCE OF DENSITY TESTS.

3. USE OF THICK LIFT COMPACTION PROCEDURES WILL NOT BE ALLOWED FOR THE FIRST STAGE BACKFILLING (BENEATH THE HAUNCHES) OF PIPE AND ON SIDES OF PIPE.

4. REFER TO PROJECT PLANS AND SPECIFICATION AND FDOT STANDARD SPECIFICATIONS FOR ROAD AND BRIDGE CONSTRUCTION, UNSUITABLE MATERIAL FOR UNDERCUTTING REQUIREMENTS.

5. REFER TO PROJECT PLANS AND SPECIFICATIONS AND FDOT STANDARD SPECIFICATIONS FOR ROAD REPLACEMENT.

6. IN DEEP CUTS USE TRENCH SHORING OR TRENCH BOX AS DIRECTED BY THE WATER AND SEWER ENGINEER.

7. THE 2' SUBGRADE UNDER LIMEROCK AND STABILIZED SUBGRADE BASES MUST BE CLEANFILL WITH NO PLASTICS PRESENT.

DATE REVISED: *JANUARY 21, 2009*			SECTION 478-5.2
Water & Sewer Department Utilities Division (352) 351-6772	CITY OF OCALA STANDARD DETAIL	TRENCH BACKFILL UNDER TRAVELED WAY FOR ALL STREETS- PAVED AND UNPAVED	B SHT 1 OF 1

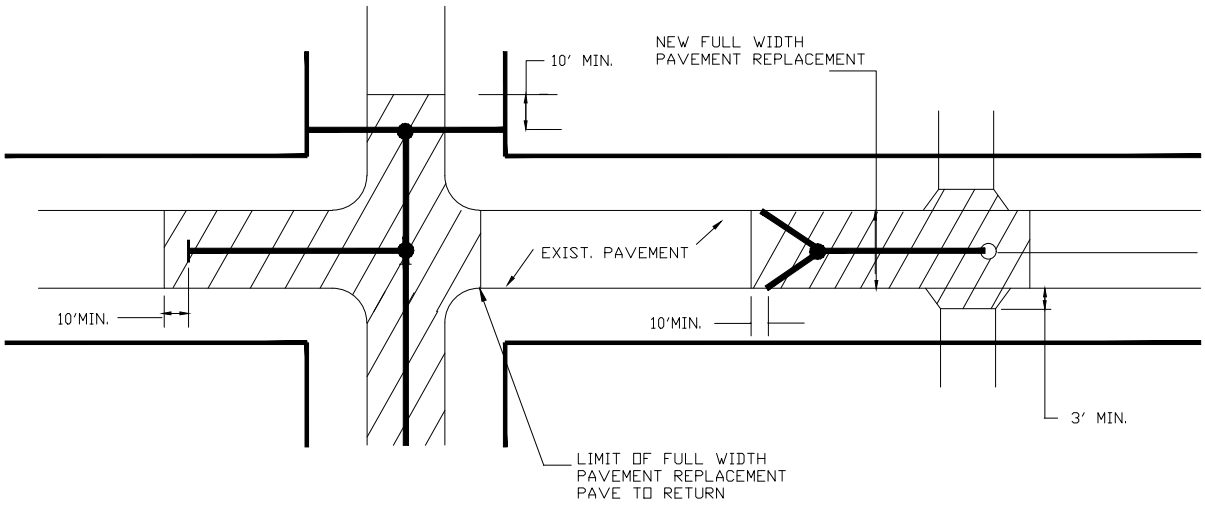

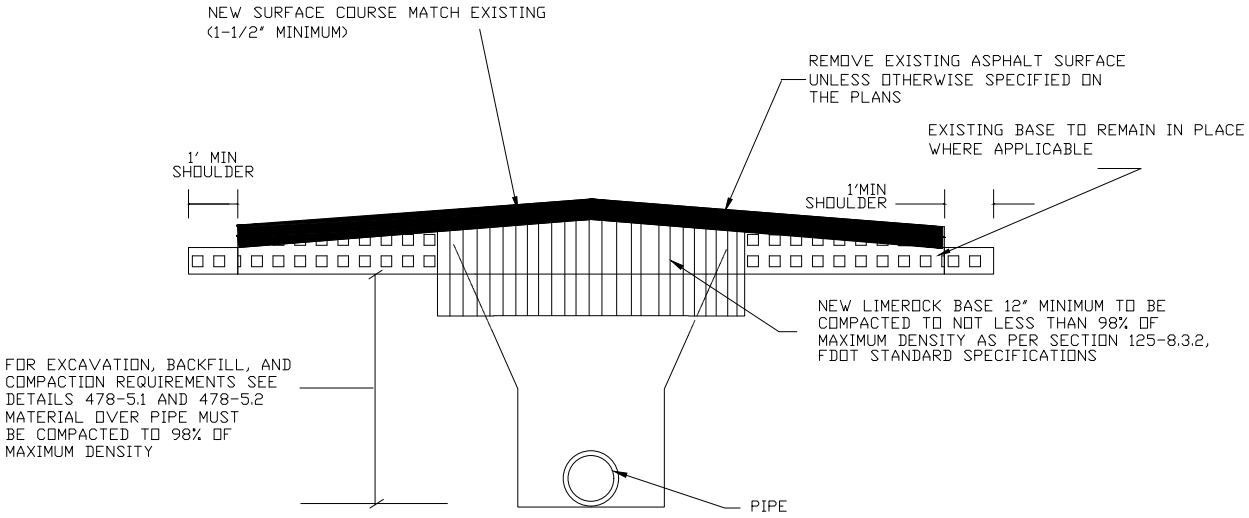

NOTES

1. UNLESS OTHERWISE SPECIFIED, MATERIALS AND METHODS OF OPERATION REQUIRED TO INSTALL NEW AND REPLACEMENT PAVEMENT SHALL BE IN ACCORDANCE WITH THE LATEST APPLICABLE REQUIREMENTS AND SPECIFICATIONS FDOT STANDARD SPECIFICATIONS FOR ROAD AND BRIDGE CONSTRUCTION.

2. ALL EXISTING DRIVEWAYS AND ROADWAYS SHALL HAVE PAVEMENT RETURNS PAVED DURING THE ROAD PAVING OPERATION.

3. THE TYPE AND THICKNESS OF THE NEW SURFACE MATERIAL SHALL BE CONSISTENT WITH THAT OF THE EXISTING SURFACE. TYPICAL STREETS VARY FROM 1" TO 4" THICK. BUT IN ALL CASES SHALL MEET THE MINIMUM STANDARDS ESTABLISHED BY THE PLANS AND SPECIFICATIONS. WHERE NO ASPHALT TYPE IS SPECIFIED THE REPLACEMENT PAVEMENT SHALL BE 1-1/2" OF SUPERPAVE ASPHALT.

DATE REVISED: *APRIL 1, 2011*			SECTION 478-6.1
Water & Sewer Department Utilities Division (352) 351-6772	CITY OF OCALA STANDARD DETAIL	FULL WIDTH PAVEMENT REPLACEMENT	A SHT 1 OF 1

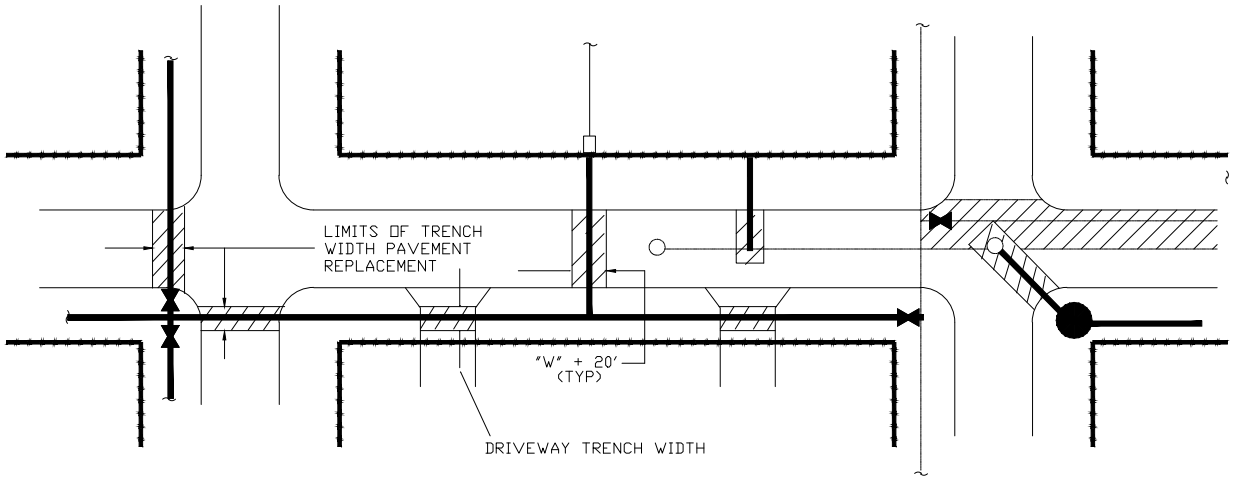

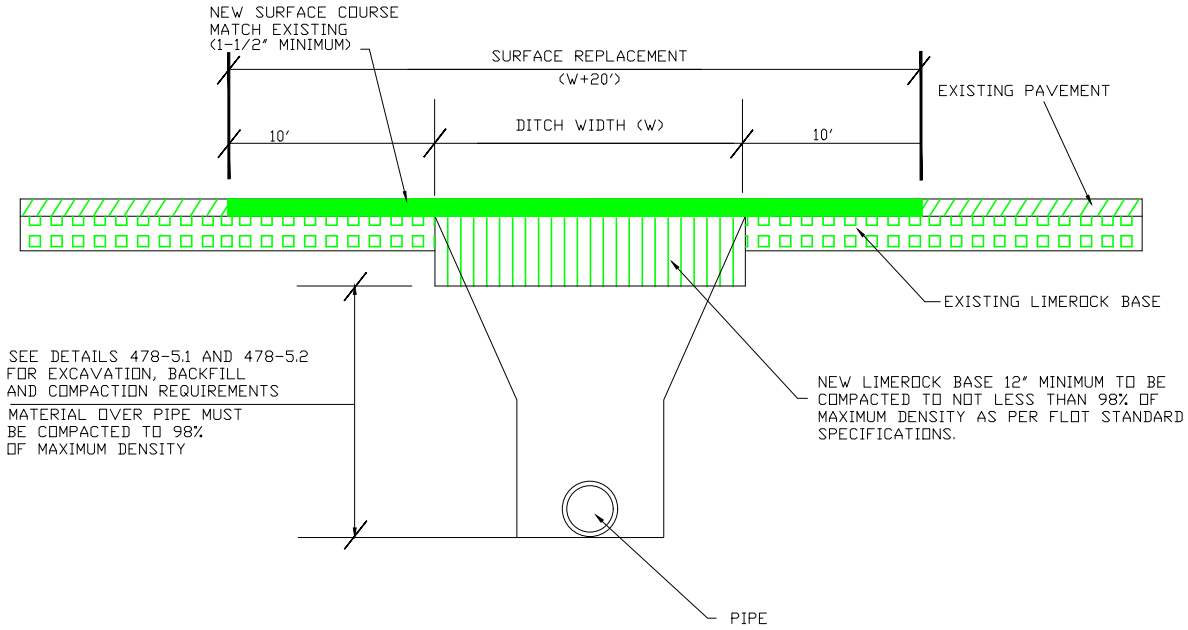

NOTES

1. UNLESS OTHERWISE SPECIFIED, MATERIALS AND METHODS OF OPERATION REQUIRED TO INSTALL NEW AND REPLACEMENT PAVEMENT SHALL BE IN ACCORDANCE WITH THE LATEST APPLICABLE REQUIREMENTS AND SPECIFICATIONS OF FDOT STANDARD SPECIFICATIONS FOR ROAD AND BRIDGE CONSTRUCTION.
2. PAVEMENT SHALL BE REMOVED TO NEATLY SAWED STRAIGHT EDGES. SAWCUTS SHALL BE MADE TO MIN DEPTH OF 1-1/2" (INCHES).
3. BACKFILL SHALL BE IN ACCORDANCE WITH SPECIFICATIONS AND FDOT STANDARD SPECIFICATIONS.
4. THE TYPE AND THICKNESS OF THE NEW SURFACE MATERIAL SHALL BE CONSISTANT WITH THAT OF THE EXISTING SURFACE. TYPICAL STREETS VARY FROM 1" TO 4" THICK.BUT IN ALL CASES SHALL MEET THE MINIMUM STANDARDS ESTABLISHED BY THE PLANS AND SPECIFICATIONS. WHERE MATERIAL TYPE IS NOT SPECIFIED THE REPLACEMENT PAVEMENT SHALL BE 1-1/2" OF SUPERPAVE ASPHALT.
5. MAINS UNDER PAVEMENT SHALL BE REPLACED WITH FULL LANE REPLACEMENT

DATE REVISED: *AUGUST 7, 2012*			SECTION 478-6.1
Water & Sewer Department Utilities Division (352) 351-6772	CITY OF OCALA STANDARD DETAIL	TRENCH WIDTH PAVEMENT REPLACEMENT	B SHT 1 OF 1

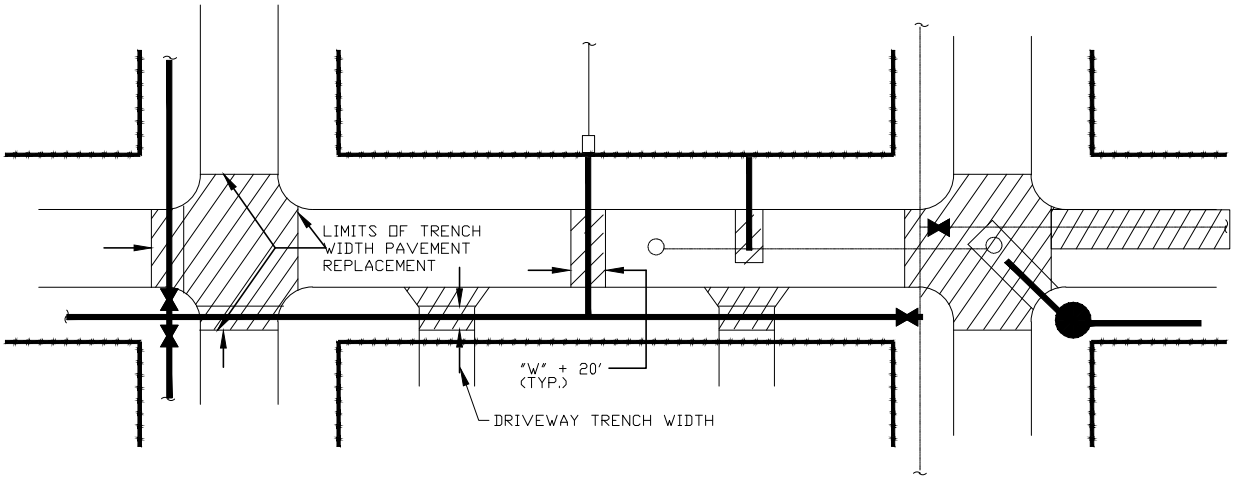

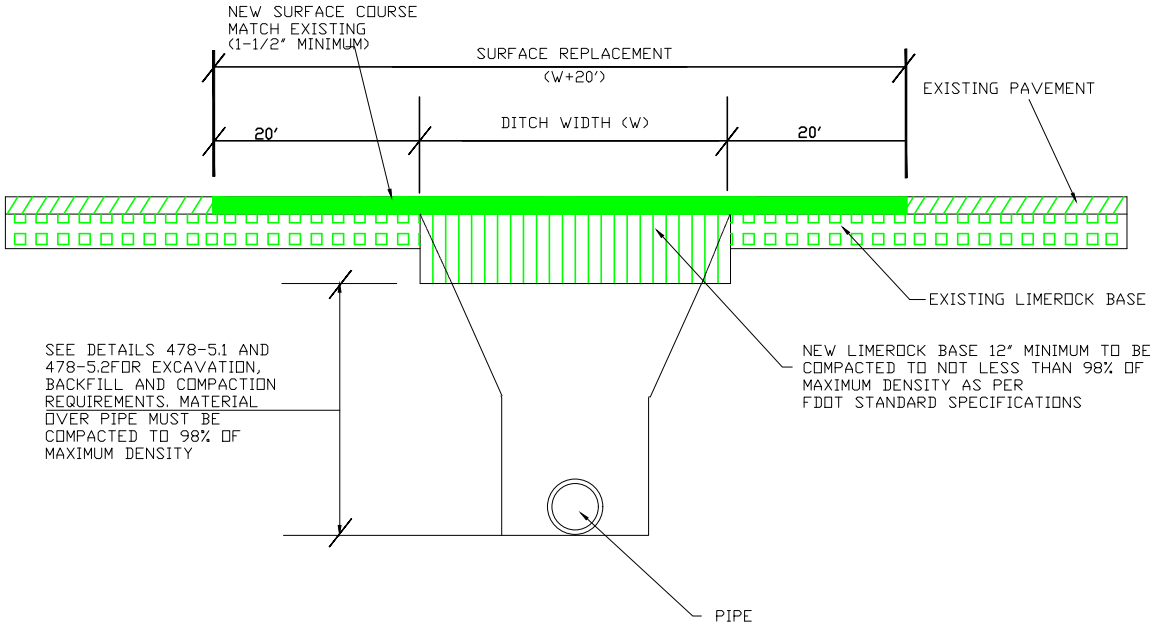

NOTES

1. UNLESS OTHERWISE SPECIFIED, MATERIALS AND METHODS OF OPERATION REQUIRED TO INSTALL NEW AND REPLACEMENT PAVEMENT SHALL BE IN ACCORDANCE WITH THE LATEST APPLICABLE REQUIREMENTS AND SPECIFICATIONS OF FDOT STANDARD SPECIFICATIONS FOR ROAD & BRIDGE CONSTRUCTION.
2. PAVEMENT SHALL BE REMOVED TO NEATLY SAWED STRAIGHT EDGES. SAWCUTS SHALL BE MADE TO MIN DEPTH OF 1-1/2"(INCHES).
3. BACKFILL SHALL BE CLEAN BACKFILL AND APPROVED BY ENGINEER.
4. THE TYPE AND THICKNESS OF THE NEW SURFACE MATERIAL SHALL BE CONSISTANT WITH THAT OF THE EXISTING SURFACE. TYPICAL STREETS VARY FROM 1" TO 4" THICK. BUT IN ALL CASES SHALL MEET THE MINIMUM STANDARDS ESTABLISHED BY THE PLANS AND SPECIFICATIONS. WHERE MATERIAL TYPE IS NOT SPECIFIED THE REPLACEMENT PAVEMENT SHALL BE 1-1/2" OF SUPERPAVE ASPHALT.
5. MAINS UNDER PAVEMENT SHALL BE REPLACED WITH FULL LANE REPLACEMENT.

DATE REVISED: *AUGUST 7, 2012*			SECTION 478-6.1
Water & Sewer Department Utilities Division (352) 351-6772	CITY OF OCALA STANDARD DETAIL	TRENCH WIDTH PAVEMENT REPLACEMENT (MARION COUNTY ROADS)	C SHT 1 OF 1

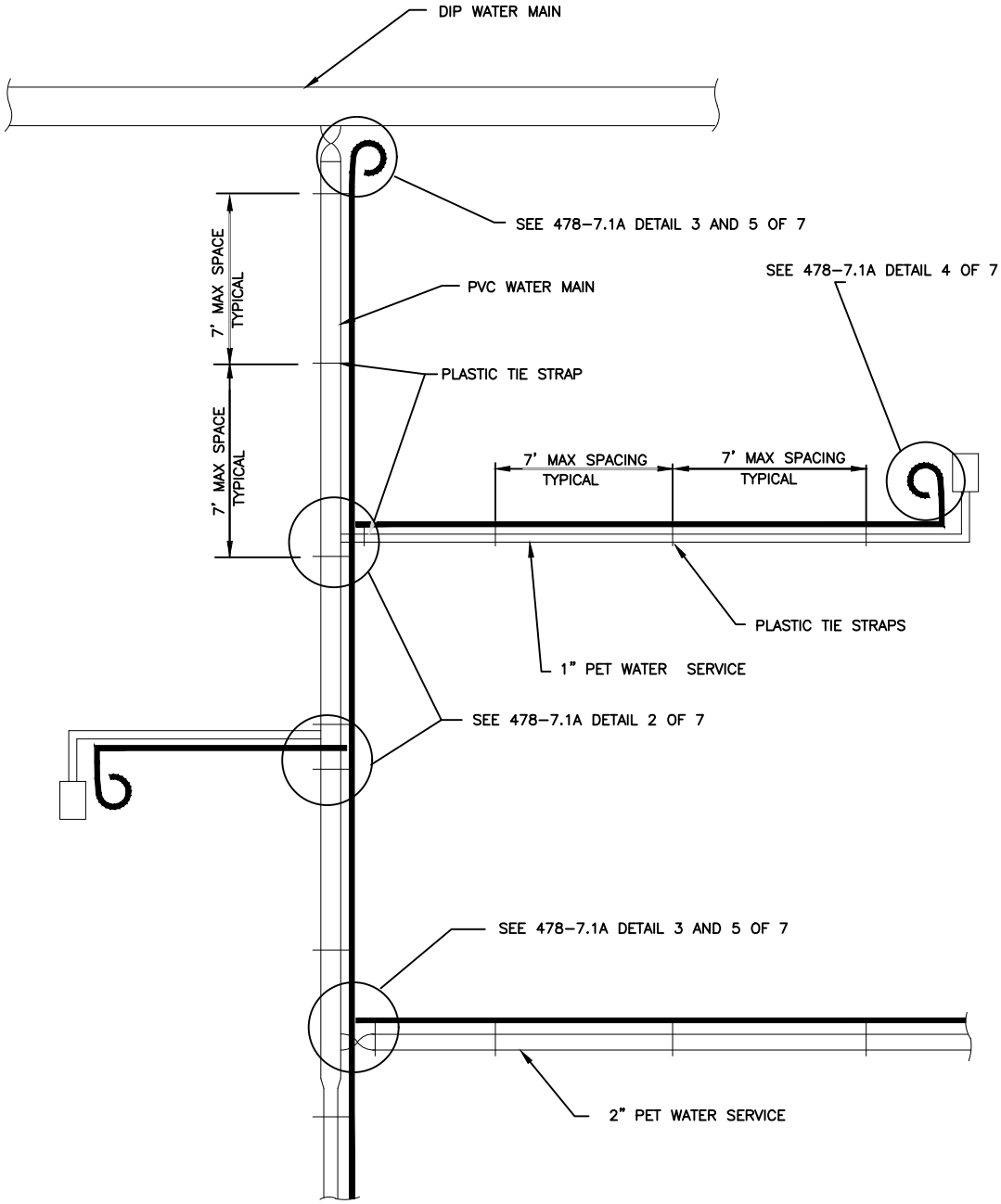

LOCATING WIRE SYSTEM

NOTES

1. LOCATING WIRE TO BE INSTALLED IN BOTH SIX AND TWELVE O'CLOCK POSITIONS.
2. SECURE LOCATING WIRES TO WATER MAIN BY USE OF PLASTIC TIE STRAPS SPACED AT A MAXIMUM DISTANCE OF SEVEN FEET (7').
3. THE ENTIRE LOCATING SYSTEM SHALL BE SUBJECTED TO TESTING TO DETERMINE ITS RELIABILITY. WHERE INSTALLED UNDER PAVEMENT AREAS, TESTING SHALL BE DONE PRIOR TO PLACEMENT OF ASPHALT.
4. AFTER WIRE INSTALLATION THROUGH GROUND CLAMPS WRAP ALL BARE WIRE WITH ELECTRICAL TAPE.
5. TERMINATE LOCATE WIRE AT ALL VALVE BOXES AND METER BOXES.
6. INSTALL GROUND ROD TERMINATION EVERY 500 FT. SEE DETAIL 478-7.1A 7 OF 7.

DATE REVISED: *APRIL 1, 2011*			SECTION 478-7.1
Water & Sewer Department Utilities Division (352) 351-6772	CITY OF OCALA STANDARD DETAIL	LOCATING WIRE	A SHT 1 OF 7

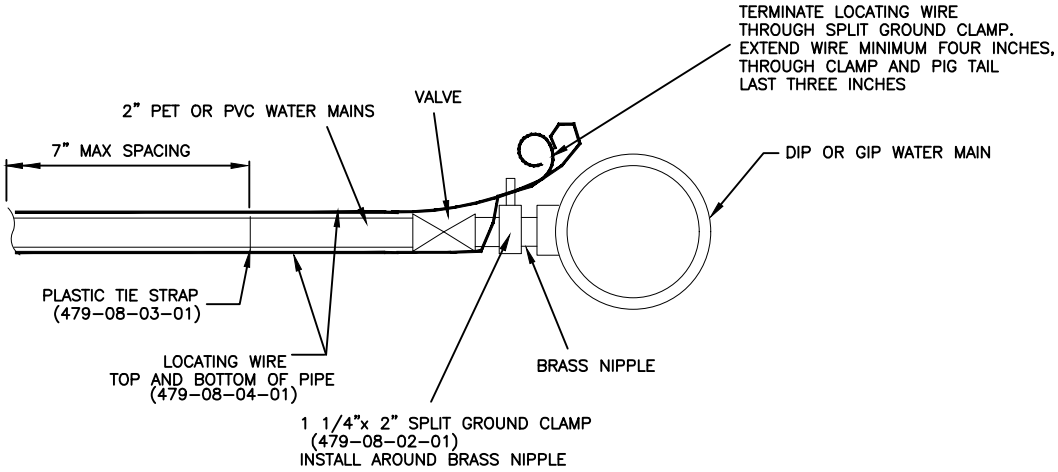

2" CONNECTION TO DIP OR GIP MAINS

2" WATER SERVICE

(SEE STANDARD 488-2.1G & H)

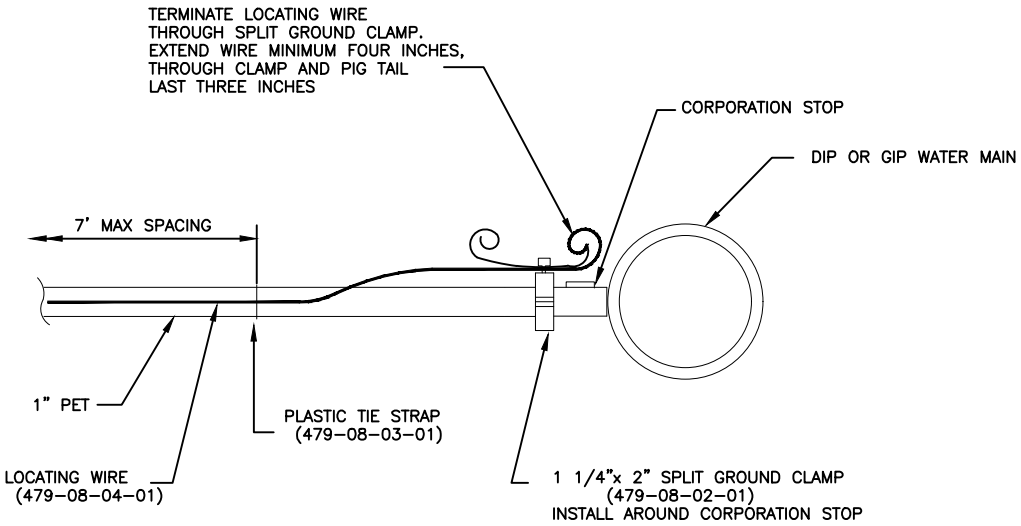

1" CONNECTION TO DIP OR GIP MAIN

SINGLE FAMILY WATER SERVICE

(SEE STANDARD DETAIL 488-2.1C & D)

DATE REVISED: *JANUARY 21, 2009*			SECTION 478-7.1
Water & Sewer Department Utilities Division (352) 351-6772	CITY OF OCALA STANDARD DETAIL	LOCATING WIRE CONNECTION TO DIP OR GIP MAIN	A SHT 2 OF 7

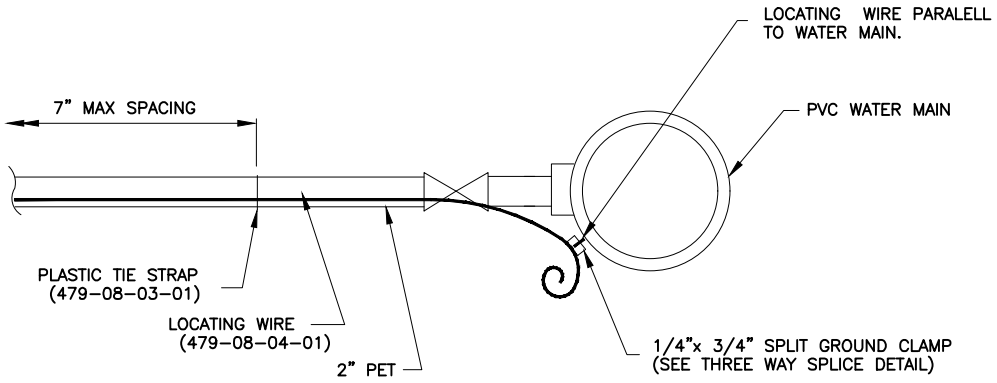

2" CONNECTION TO PVC WATER MAIN

MULTI FAMILY WATER SERVICE

(SEE STANDARD 488-2.1G & H)

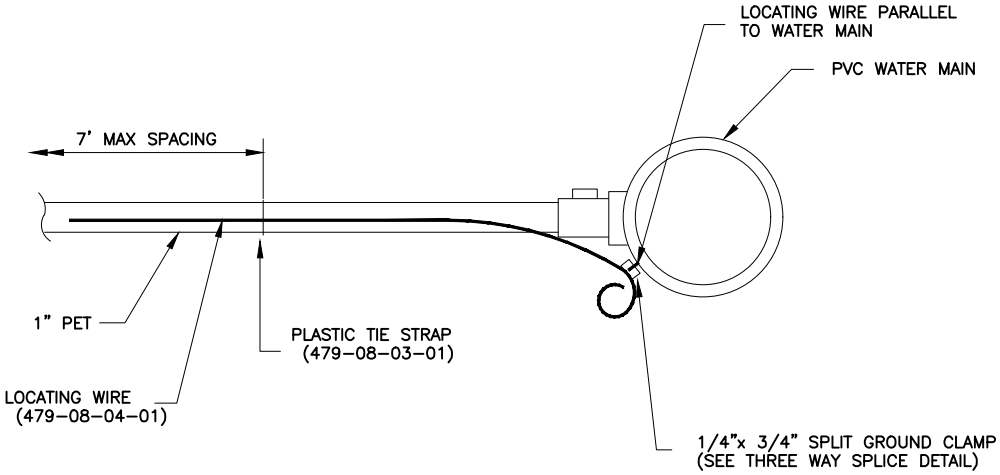

1" CONNECTION TO PVC WATER MAIN

SINGLE FAMILY WATER SERVICE

(SEE STANDARD DETAIL 488-2.1C & D)

DATE REVISED: *JANUARY 21, 2009*			SECTION 478-7.1
Water & Sewer Department Utilities Division (352) 351-6772	CITY OF OCALA STANDARD DETAIL	LOCATING WIRE CONNECTION TO PVC MAIN	A SHT 3 OF 7

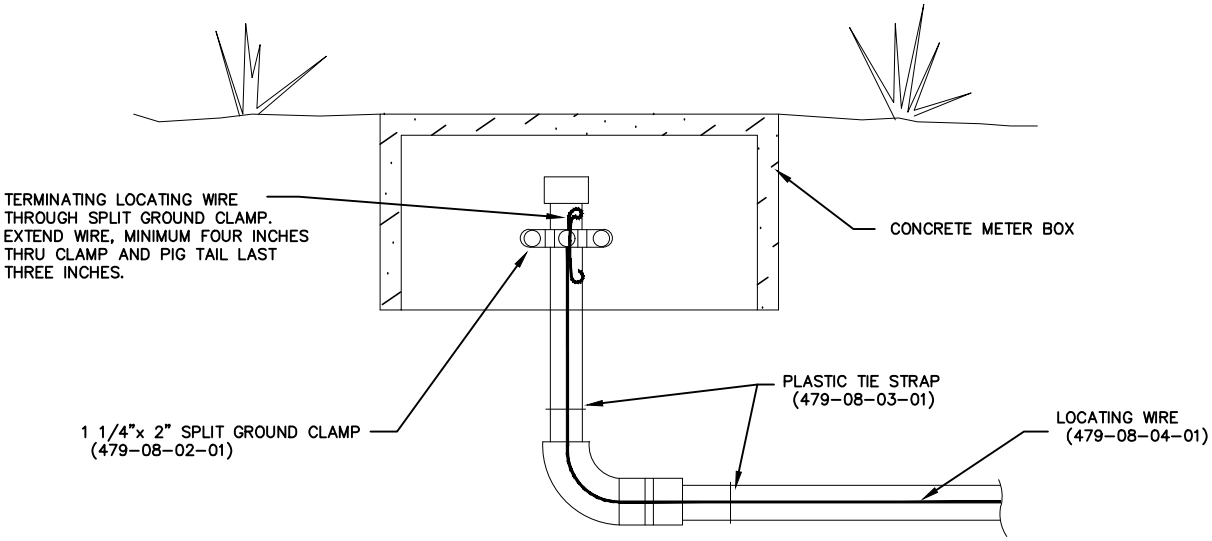

TERMINATION AT METER BOX

MULTIFAMILY WATER SERVICE

SEE STANDARD DETAIL 488-2.1K

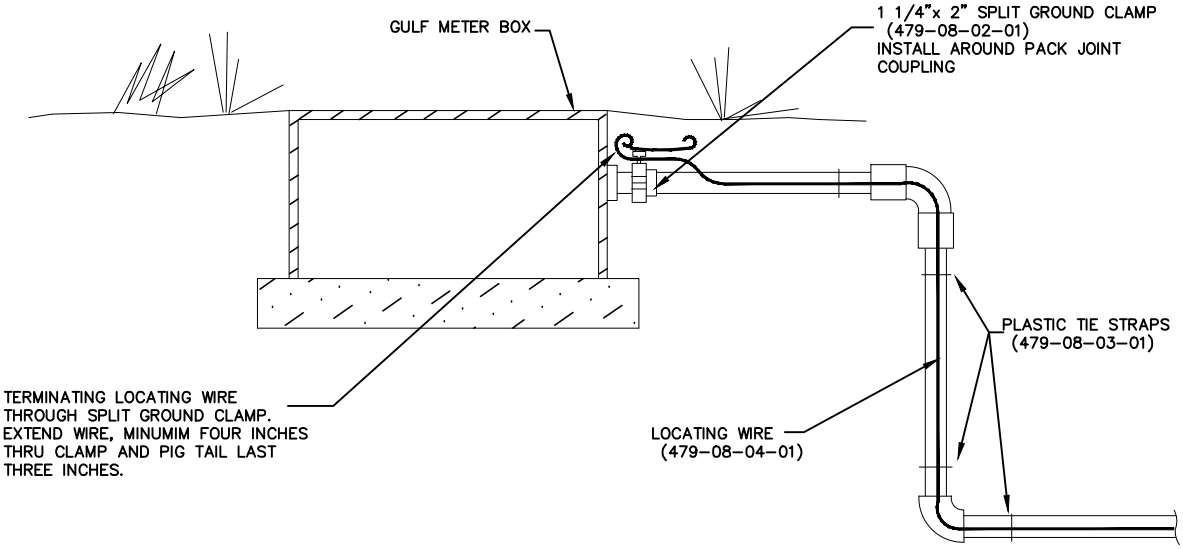

TERMINATION AT METER BOX

SINGLE FAMILY WATER SERVICE

SEE STANDARD DETAIL 488-2.1A

DATE REVISED: *JANUARY 21, 2009*			SECTION 478-7.1
Water & Sewer Department Utilities Division (352) 351-6772	CITY OF OCALA STANDARD DETAIL	LOCATING WIRE TERMINATION AT METER BOX	A SHT 4 OF 7

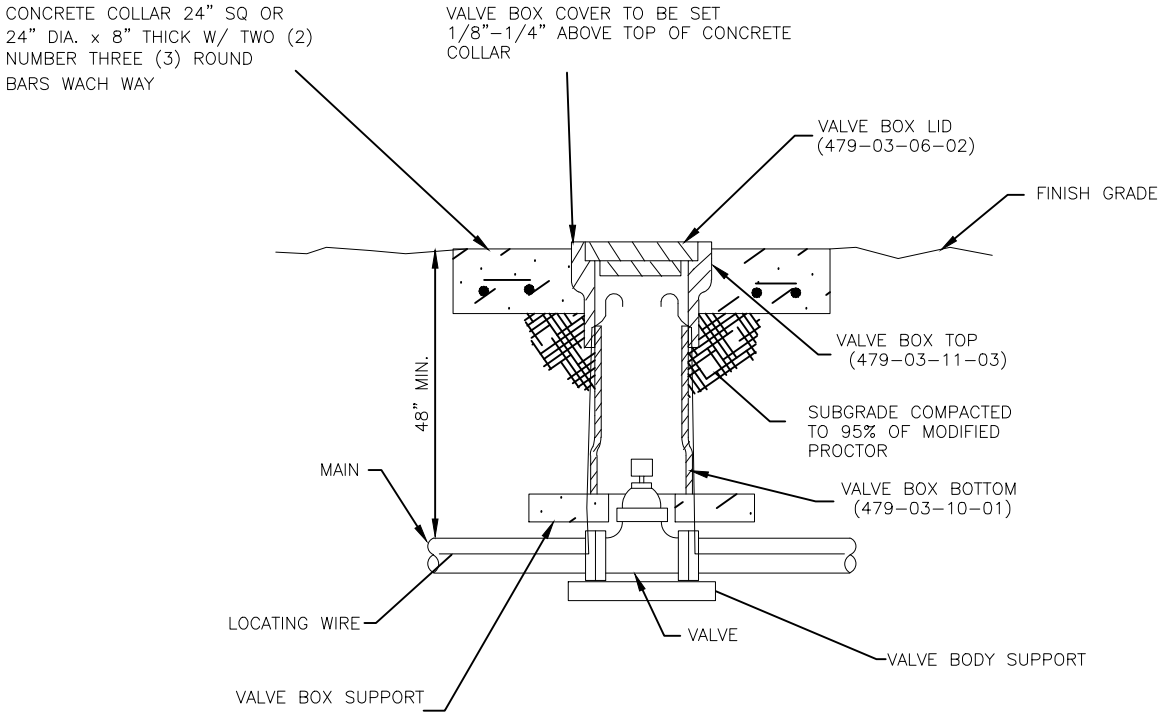

TERMINATION AT VALVE BOX

SEE STANDARD DETAIL 478-4.1

NOTES

1. TERMINATE AT ALL VALVES.
2. ENSURE WIRE IS TO THE SIDE OF THE VALVE BOX SO THE VALVE CAN BE PROPERLY OPERATED.

DATE REVISED: *AUGUST 7, 2012*			SECTION 478-7.1A
Water & Sewer Department Utilities Division (352) 351-6772	CITY OF OCALA STANDARD DETAIL	LOCATING WIRE TERMINATION AT VALVE BOX	A SHT 5 OF 7

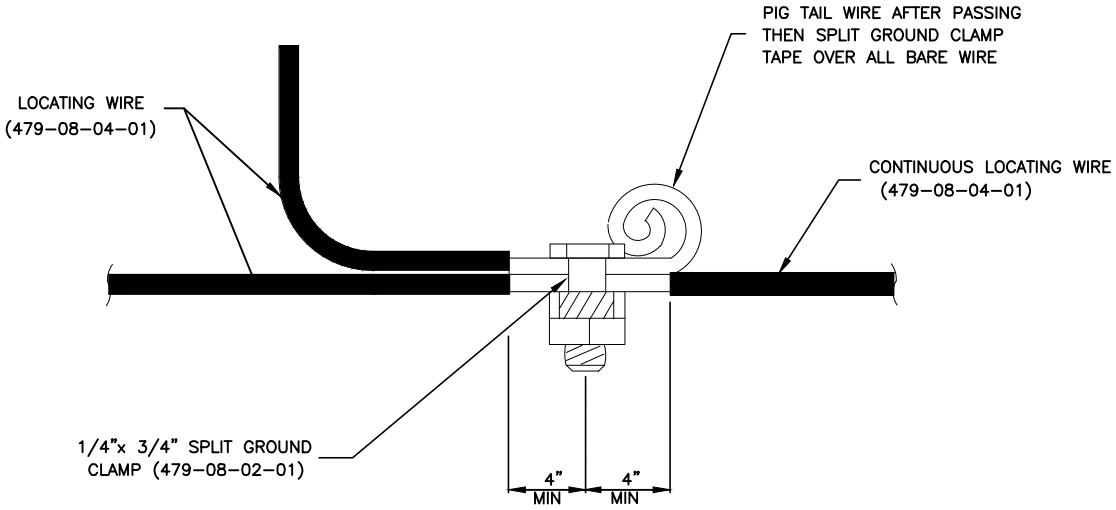

THREE WAY SPLICE

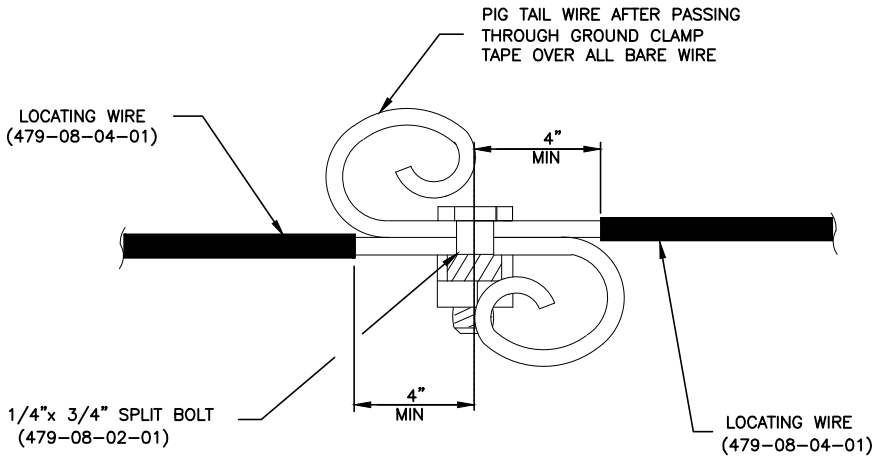

SINGLE SPLICE

DATE REVISED: *JANUARY 21, 2009*			SECTION 478-7.1
Water & Sewer Department Utilities Division (352) 351-6772	CITY OF OCALA STANDARD DETAIL	LOCATING WIRE	A SHT 6 OF 7

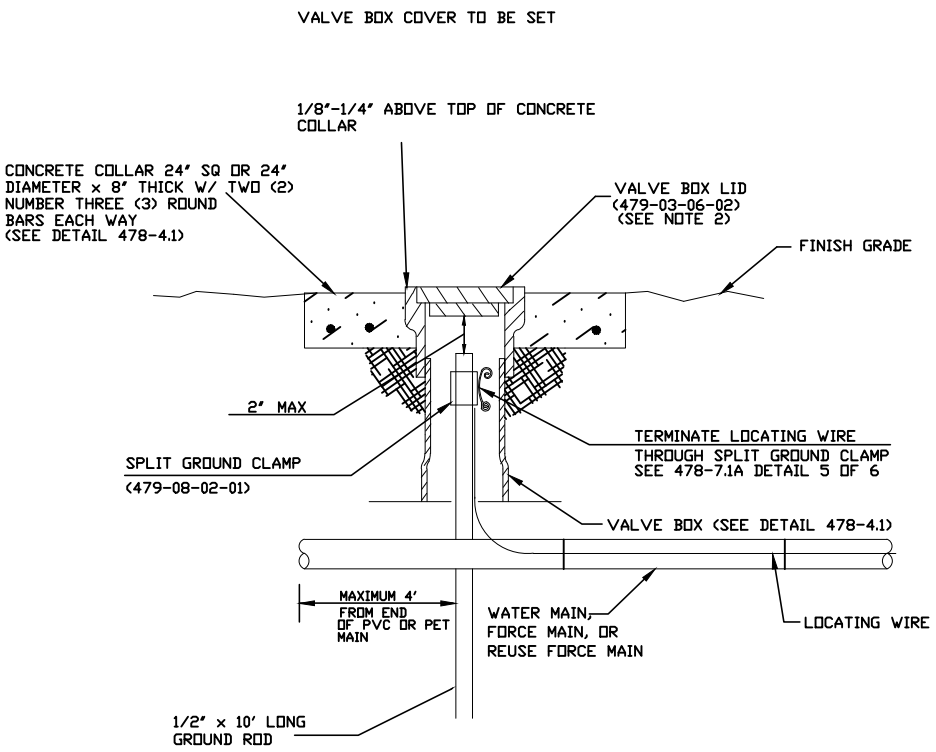

GROUND ROD TERMINATION

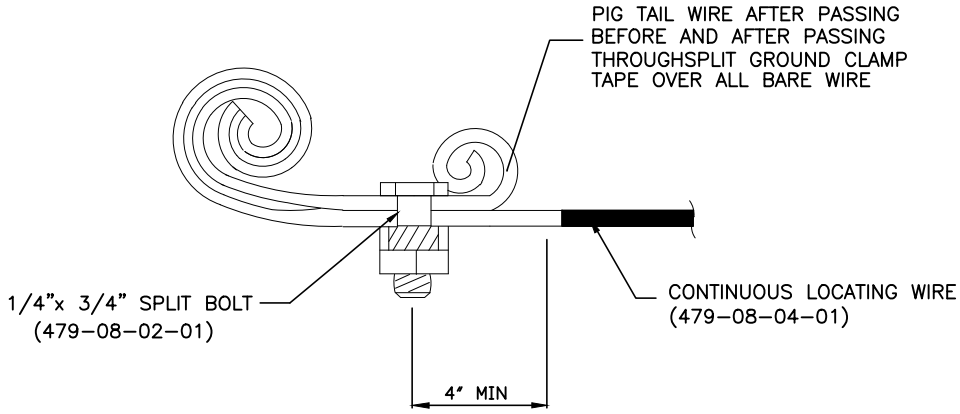

END TERMINATION

NOTES

1. USE ONLY ONE STANDARD VALVE BOX EXTENSION 479-03-11-02.
2. VALVE BOX LID TO BE FURNISHED WITH THE WORD "WATER" FOR WATER MAIN INSTALLATION, "SEWER" FOR SEWER MAIN INSTALLATION OR "REUSE" FOR REUSE MAIN INSTALLATION.
3. MAXIMUM SPACING BETWEEN GROUNDING ROD IS 500 FEET.

DATE REVISED: *JANUARY 21, 2009*			SECTION 478-7.1
Water & Sewer Department Utilities Division (352) 351-6772	CITY OF OCALA STANDARD DETAIL	LOCATING WIRE END TERMINATION	A SHT 7 OF 7

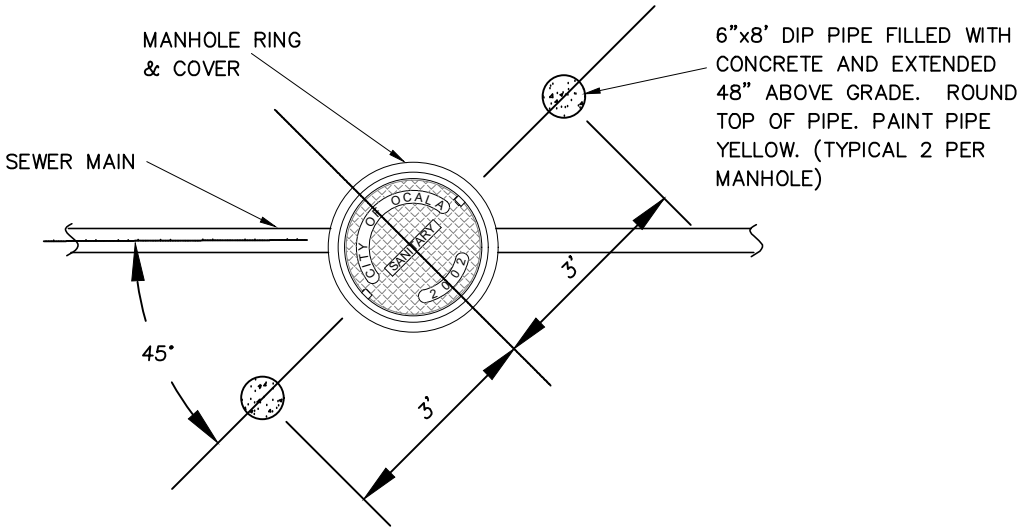

TYPICAL BOLLARD INSTALLATION

SANITARY SEWER MANHOLES

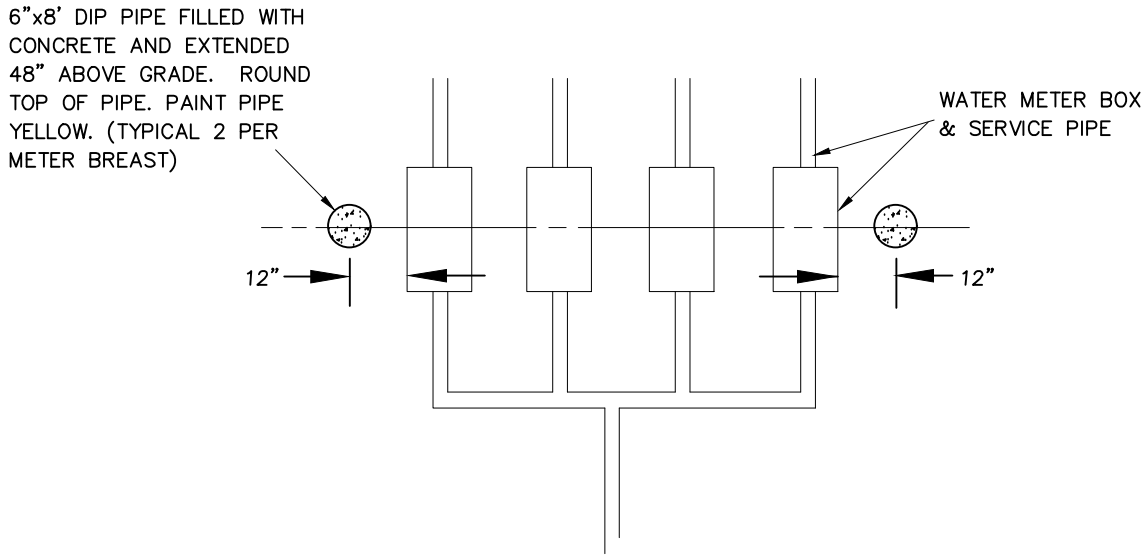

TYPICAL BOLLARD INSTALLATION

WATER METER BREAST

DATE REVISED: *NOVEMBER 7, 2004*			SECTION 478-8.1
Water & Sewer Department Utilities Division (352) 351-6772	CITY OF OCALA STANDARD DETAIL	BOLLARD INSTALLATION	A SHT 1 OF 1

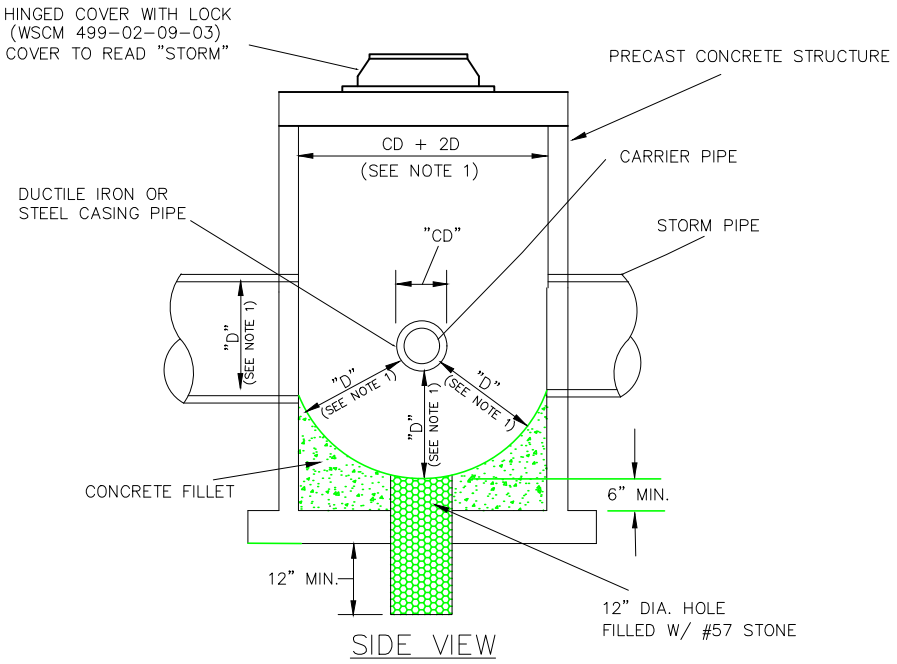

SIDE VIEW

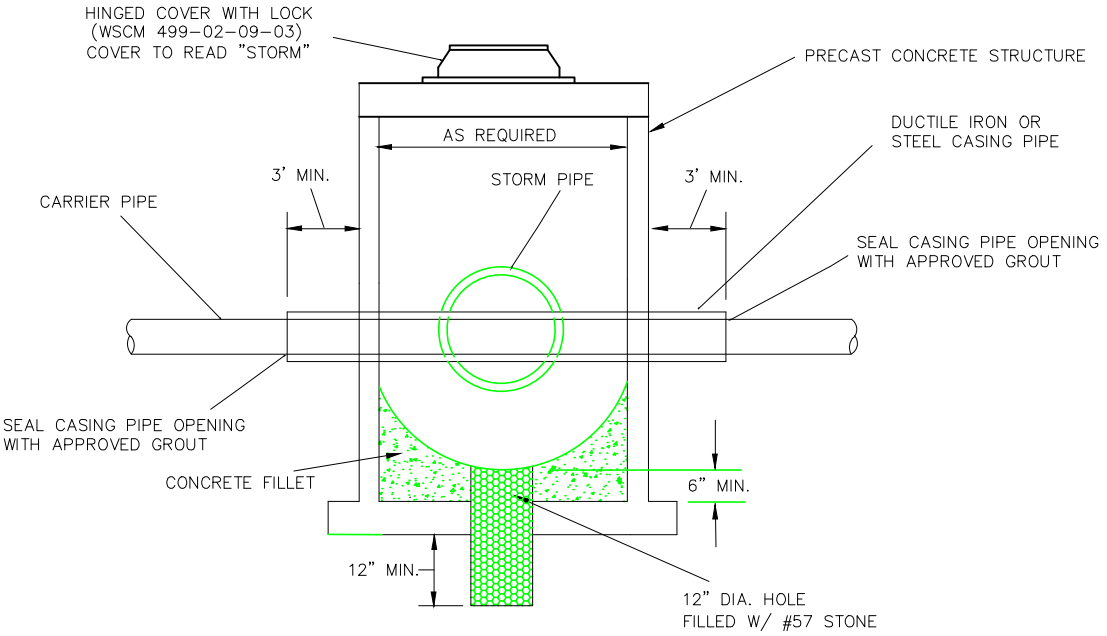

PLAN VIEW

1. FOR ALL ELLIPTICAL, ARCH OR OTHER NON-CIRCULAR PIPES "D" EQUALS THE EQUIVALENT CIRCULAR DAIMETER.
2. FOR EXISTING CARRIER PIPES USE STEEL CASING. CUT CASING AS REQUIRED, INSTALL AROUND CARRIER PIPE AND WELD CASING PIPE BACK TOGETHER TO THE SATISFACTION OF THE ENGINEER.
3. PROVIDE APPROVED CASING SPACERS AS REQUIRED.

DATE REVISED: *JANUARY 21, 2009*			SECTION 478-9.1
Water & Sewer Department Utilities Division (352) 351-6772	CITY OF OCALA STANDARD DETAIL	CONFLICT MANHOLE	A SHT 1 OF 1

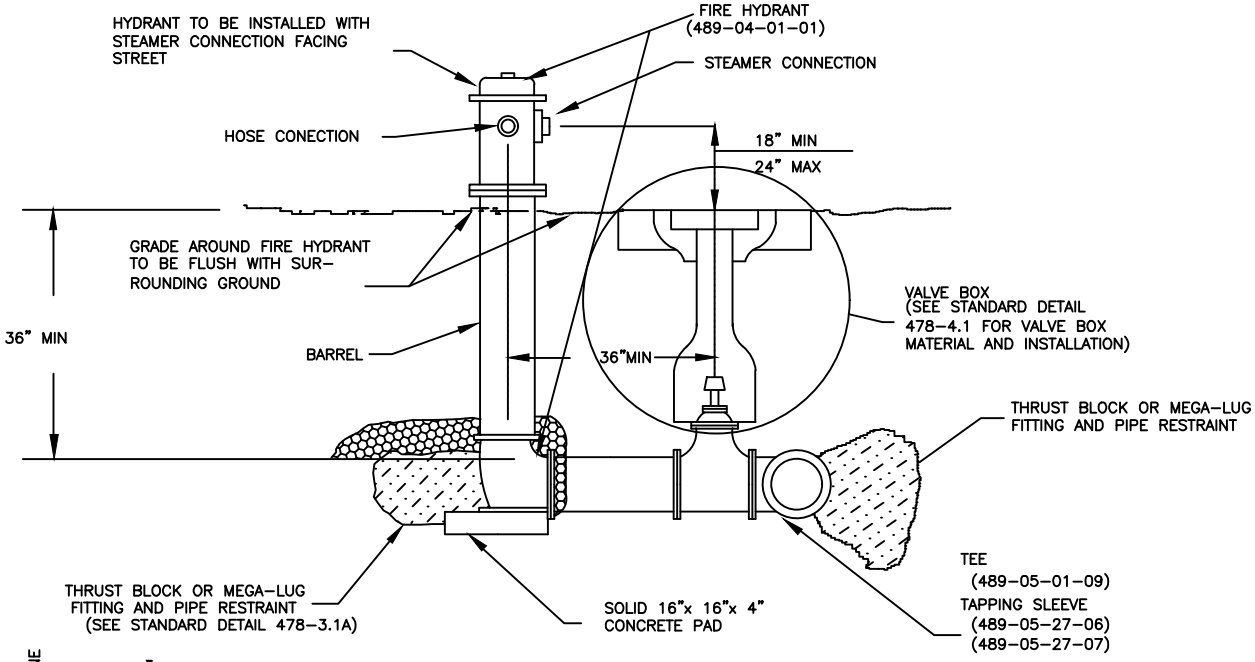

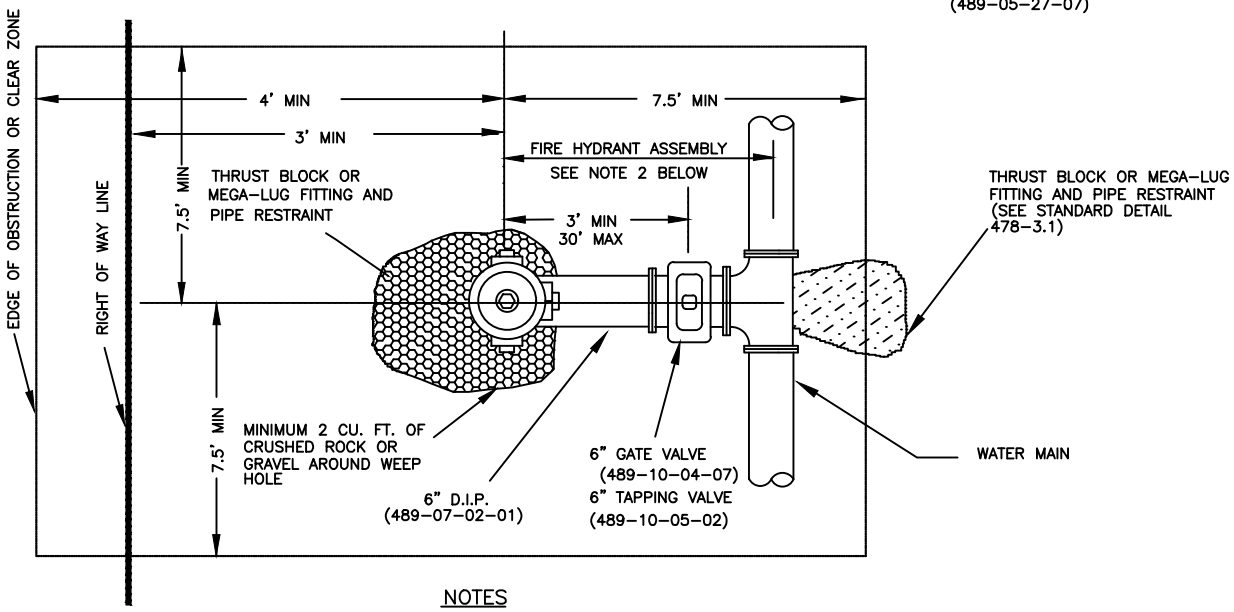

NOTES

1. NO MORE THAN ONE BARREL SECTION SHALL BE ALLOWED WHEN ADJUSTING HYDRANT TO FINISHED GRADE. HYDRANT EXTENSIONS ARE TO BE SAME MANUFACTURER AS HYDRANT. MAXIMUM LENGTH OF EXTENSION SHALL BE 24".
2. FIRE HYDRANT ASSEMBLY INCLUDES TEE, VALVE, VALVE BOX, 6" PIPE AND FIRE HYDRANT.
3. NEW HYDRANTS TO BE INSTALLED WITH "OUT OF SERVICE" MARKER (489-04-99-10). INSTALL ON HYDRANT UNTIL HYDRANT IS CLEARED AND ACCEPTED BY FIRE DEPARTMENT. SEE SECTION 481.4.6.6
4. NEW FIRE HYDRANTS TO BE FACTORY PAINTED RED. EXISTING HYDRANTS THAT REQUIRE REPAINTING TO BE PRESSURE WASHED (3000 PSI) TO REMOVE ALL LOOSE DEBRIS,PAINT OR OTHER FOREIGN MATERIALS. REPAINT HYDRANT TO IN ACCORDANCE WITH MANUFACTURERS RECOMMENDATIONS. FINISH PAINT TO BE POLYURETHANE, "SAFETY RED".
5. PROVIDE ONE BLUE REFLECTIVE PAVEMENT MARKER (RPM) IN THE CENTER OF THE CLOSEST VEHICLE TRAVEL LANE AND DIRECTLY OPPOSITE THE HYDRANT LOCATION.

DATE REVISED: *AUGUST 7, 2012*			SECTION 488-1.1
Water & Sewer Department Utilities Division (352) 351-6772	CITY OF OCALA STANDARD DETAIL	FIRE HYDRANT ASSEMBLY	A
		PERPENDICULAR TO MAIN	SHT 1 OF 1

\\sharedept\Clust3\Water_sd-WS-Engineering\Water & Sewer Construction Manual\August 2012\Details\Water-Rev. April 2011\48811A 080712.dwg, 11/8/2016 1:18:56 PM

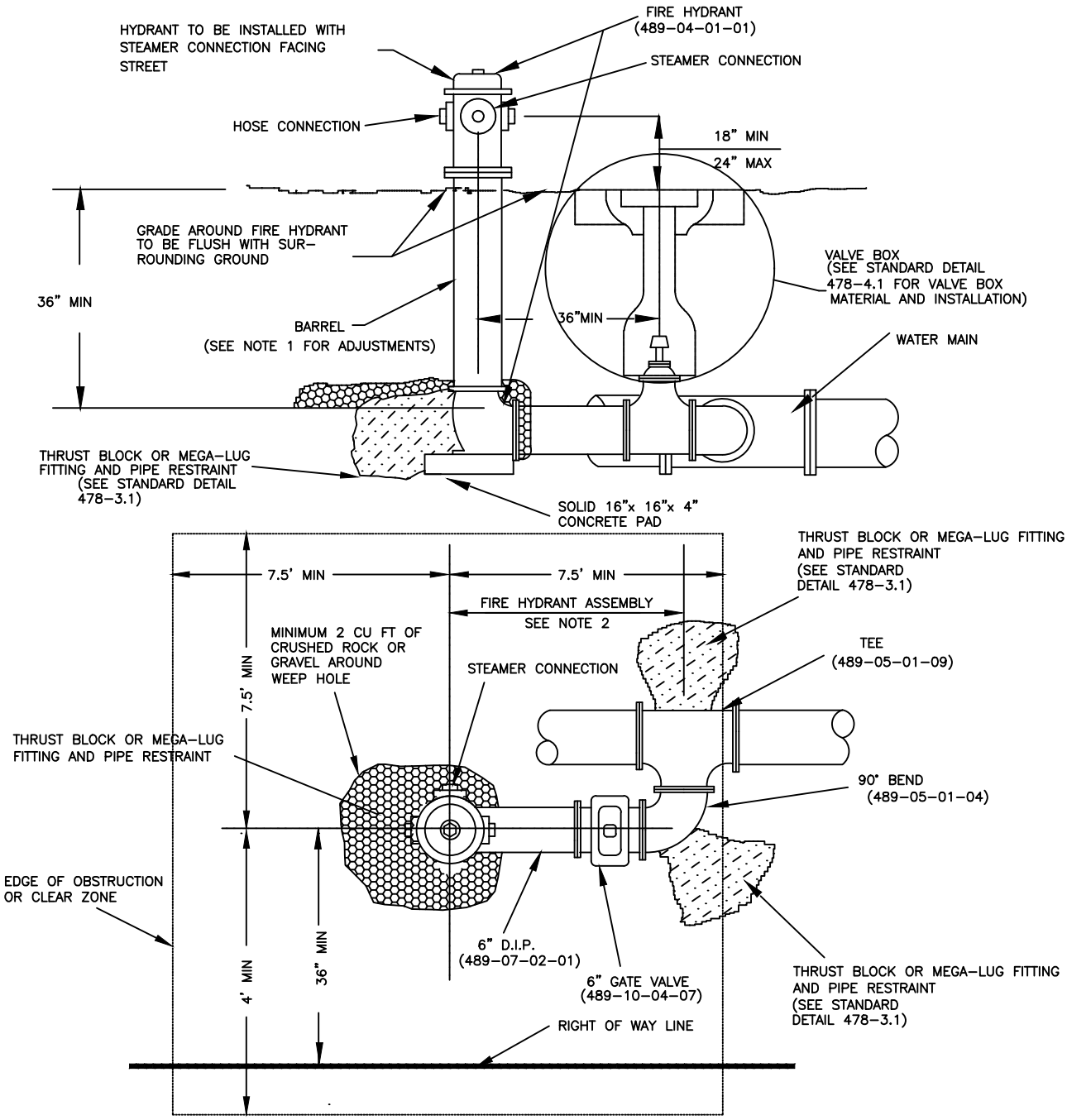

NOTES

1. NO MORE THAN ONE BARREL SECTION SHALL BE ALLOWED WHEN ADJUSTING HYDRANT TO FINISHED GRADE. HYDRANT EXTENSION TO BE SAME MANUFACTURER AS HYDRANT. MAXIMUM LENGTH OF EXTENSION LIMITED TO 24".
2. FIRE HYDRANT ASSEMBLY INCLUDES TEE, BEND, VALVE, 6" PIPE, AND FIRE HYDRANT.
3. NEW HYDRANTS TO BE INSTALLED WITH "OUT OF SERVICE " MARKER (489-04-99-10). INSTALL ON HYDRANT UNTIL HYDRANT IS CLEARED AND ACCEPTED BY FIRE DEPARTMENT. SEE SECTION 481.4.6.6.
4. NEW FIRE HYDRANTS TO BE FACTORY PAINTED RED. EXISTING HYDRANTS THAT REQUIRE REPAINTING TO BE PRESSURE WASHED (3000 PSI) TO REMOVE ALL LOOSE DEBRIS, PAINT OR OTHER FOREIGN MATERIALS. REPAINT HYDRANT IN ACCORDANCE WITH MANUFACTURERS RECOMMENDATIONS. FINISH PAINT TO BE POLYURETHANE, "SAFETY RED".
5. PROVIDE ONE BLUE REFLECTIVE PAVEMENT MARKER (RPM) IN THE CENTER OF THE CLOSEST VEHICLE TRAVEL LANE AND DIRECTLY IN FRONT OF HYDRANT LOCATION.

DATE REVISED: *AUGUST 7, 2012*			SECTION 488-1.1
Water & Sewer Department Utilities Division (352) 351-6772	CITY OF OCALA STANDARD DETAIL	FIRE HYDRANT ASSEMBLY	B
		PARALLEL TO MAIN	SHT 1 OF 1

\\sharedept\Clust3\Water_sd-WS-Engineering\Water & Sewer Construction Manual\August 2012\Details\Water-Rev. April 2011\48811B 070812.dwg, 11/8/2016 1:19:06 PM

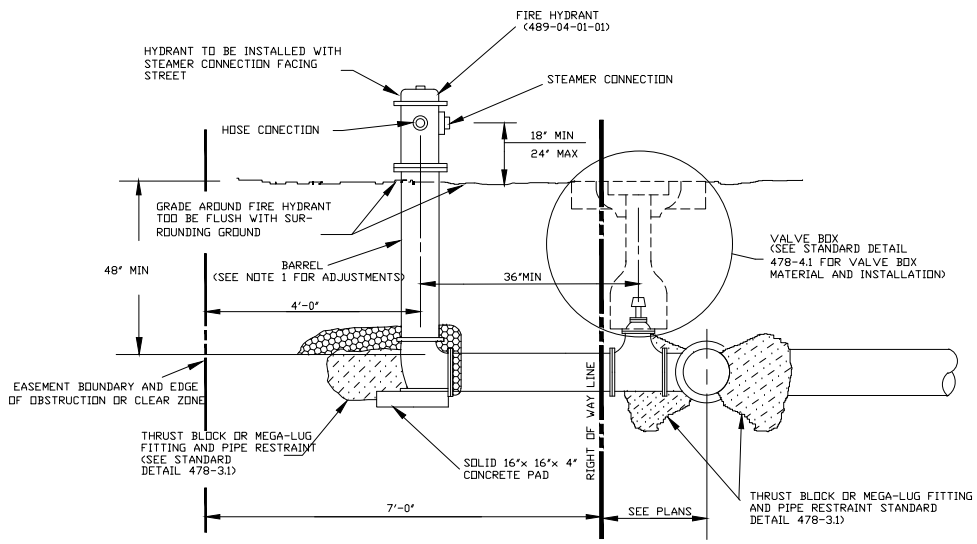

SECTION VIEW

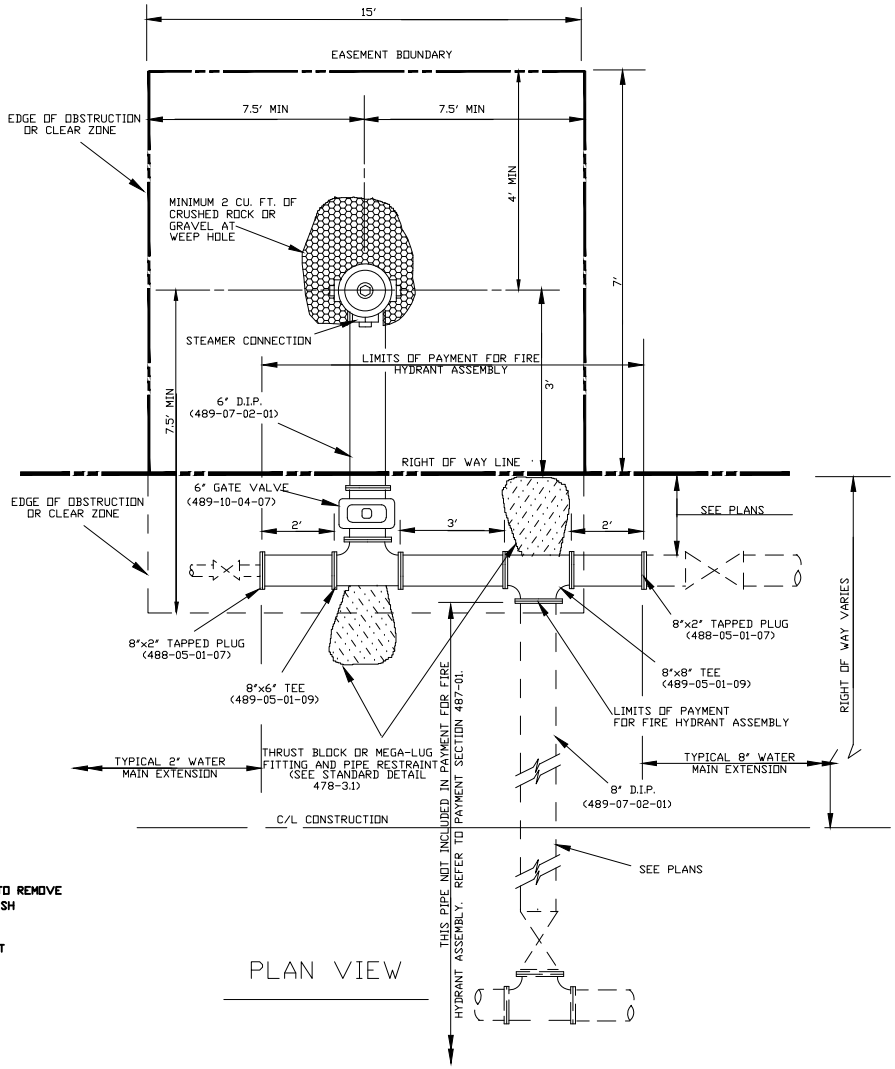

PLAN VIEW

NOTES

1. NO MORE THAN ONE BARREL SECTION SHALL BE ALLOWED WHEN ADJUSTING HYDRANT TO FINISHED GRADE. HYDRANT EXTENSIONS TO BE SAME MANUFACTURER AS HYDRANT. MAXIMUM LENGTH OF EXTENSION IS LIMITED TO 24".
2. REFER TO CONSTRUCTION PLANS FOR ACTUAL LOCATION OF EASEMENT.
3. FIRE HYDRANT ASSEMBLY INCLUDES 8"x8" TEE, 8"x6" TEE, 2-8"x2" TAPPED PLUGS, 6" GATE VALVE AND BOX, 6" D.I.P., FIRE HYDRANT AND 7'-8" D.I.P.
4. NEW HYDRANTS TO BE INSTALLED WITH "OUT OF SERVICE" MARKER (488-04-99-10). INSTALL ON HYDRANT UNTIL HYDRANT IS CLEARED AND ACCEPTED BY FIRE DEPARTMENT. SEE SECTION 481.4.6.6.
5. NEW FIRE HYDRANTS TO BE FACTORY PAINTED RED. EXISTING HYDRANTS THAT REQUIRE REPAINTING TO BE PRESSURE WASHED (3000 PSI) TO REMOVE ALL LOOSE DEBRIS,PAINT OR OTHER FOREIGN MATERIALS. REPAINT HYDRANT IN ACCORDANCE WITH MANUFACTURERS RECOMMENDATIONS. FINISH PAINT TO BE POLYURETHANE, "SAFETY RED".
6. PROVIDE ONE BLUE REFLECTIVE PAVEMENT MARKER (RPM) IN THE CENTER OF THE CLOSEST VEHICLE TRAVEL LANE AND DIRECTLY IN FRONT OF HYDRANT LOCATION.

DATE REVISED: *DECEMBER18,2012*			SECTION 488-1.1
Water & Sewer Department Utilities Division (352) 351-6772	CITY OF OCALA STANDARD DETAIL	FIRE HYDRANT ASSEMBLY	C
		FOUR LANE HIGHWAY INSTALLATION	SHT 1 OF 1

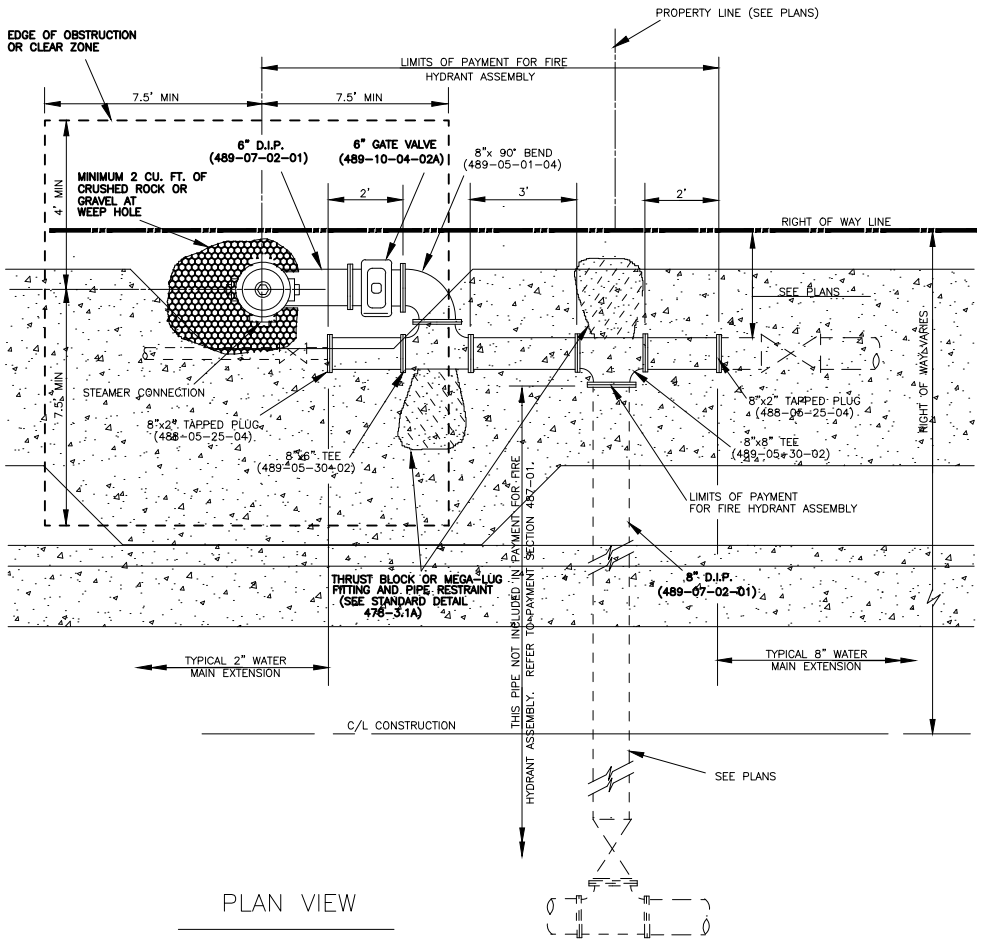

PLAN VIEW

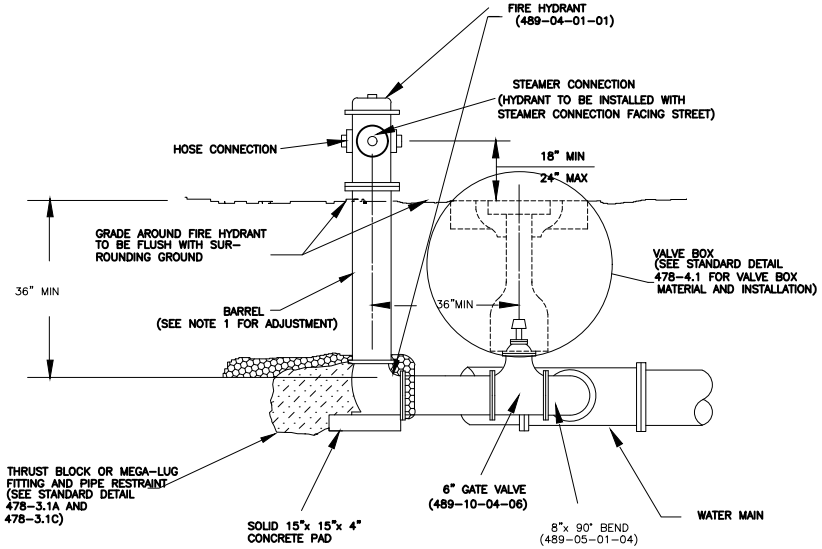

SECTION VIEW

NOTES

1. NO MORE THAN ONE BARREL SECTION SHALL BE ALLOWED WHEN ADJUSTING HYDRANT TO FINISHED GRADE. HYDRANT EXTENSIONS TO BE SAME MANUFACTURER AS HYDRANT. MAXIMUM LENGTH OF EXTENSION IS LIMITED TO 24".
2. FIRE HYDRANT ASSEMBLY INCLUDES (1) 8"x8" TEE, (1) 8"x6" TEE, (2) 8"x2" TAPPED PLUGS, (1) 6" GATE VALVE AND BOX, (1) 6"x90° BEND, (3') 6" D.I.P., (1) FIRE HYDRANT AND (7') 8" D.I.P.
3. NEW HYDRANTS TO BE INSTALLED WITH "NOT IN SERVICE" BAG (488-04-99-11). INSTALL ON HYDRANT UNTIL HYDRANT IS CLEARED AND ACCEPTED BY FIRE DEPARTMENT. SEE SECTION 481-4.6.6.
4. NEW FIRE HYDRANTS TO BE FACTORY PAINTED RED. EXISTING HYDRANTS THAT REQUIRE REPAINTING TO BE PRESSURE WASHED (3000 PSI) TO REMOVE ALL LOOSE DEBRIS,PAINT OR OTHER FOREIGN MATERIALS. REPAINT HYDRANT IN ACCORDANCE WITH MANUFACTURERS RECOMMENDATIONS. FINISH PAINT TO BE RUST-OLEUM 639K7764402, "SAFETY RED" OR EQUIVALENT.
5. PROVIDE ONE BLUE REFLECTIVE PAVEMENT MARKER (RPM) IN THE CENTER OF THE CLOSEST VEHICLE TRAVEL LANE AND DIRECTLY IN FRONT OF HYDRANT LOCATION.

DATE REVISED: *JULY 9, 2009*			SECTION 488-1.1
Water & Sewer Department Utilities Division (352) 351-6772	CITY OF OCALA STANDARD DETAIL	FIRE HYDRANT ASSEMBLY FOUR LANE HIGHWAY INSTALLATION	D SHT 1 OF 1

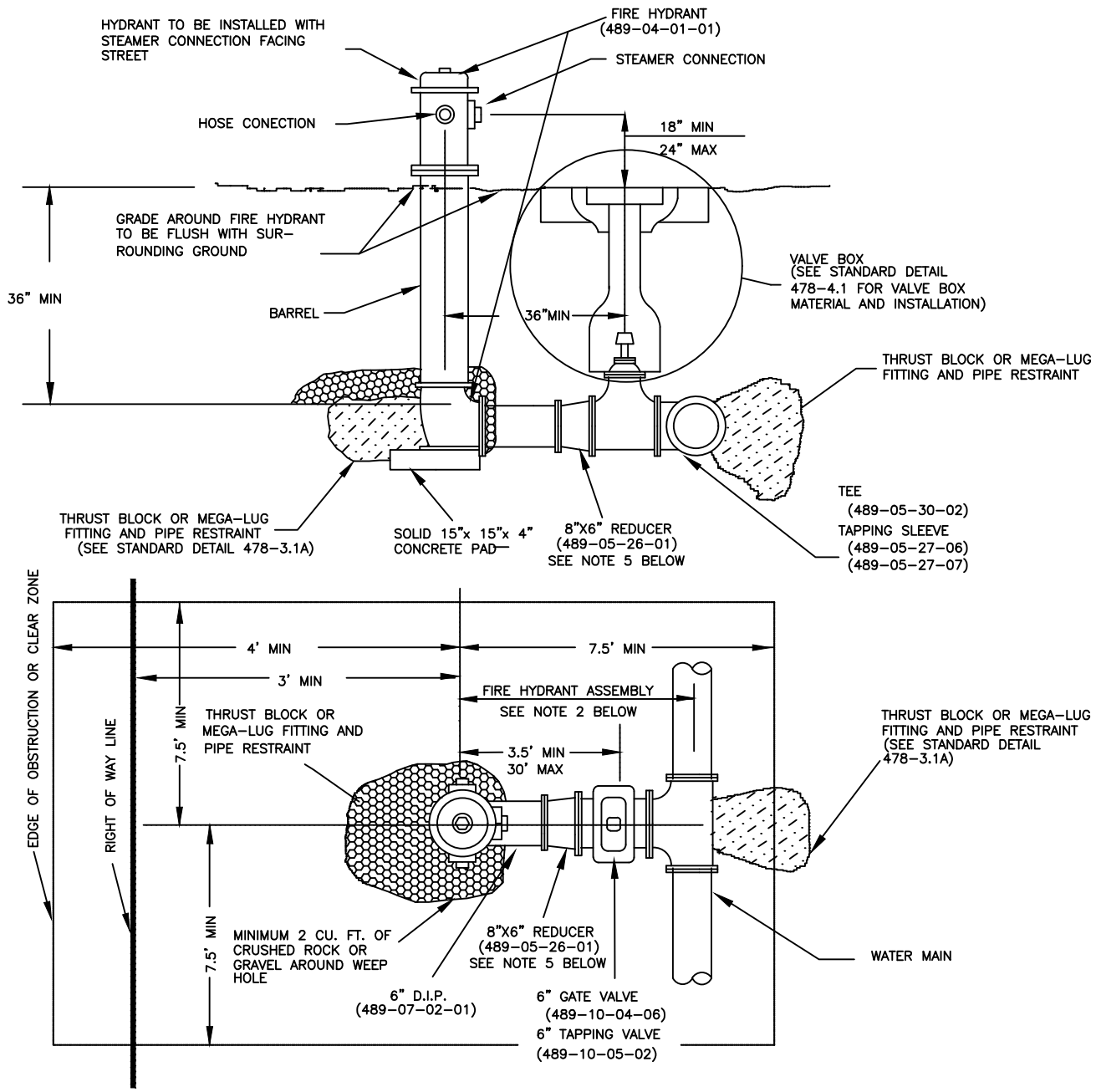

NOTES

1. NO MORE THAN ONE BARREL SECTION SHALL BE ALLOWED WHEN ADJUSTING HYDRANT TO FINISHED GRADE. HYDRANT EXTENSIONS ARE TO BE SAME MANUFACTURER AS HYDRANT. MAXIMUM LENGTH OF EXTENSION SHALL BE 24".
2. FIRE HYDRANT ASSEMBLY INCLUDES TEE, VALVE, VALVE BOX, 6" PIPE AND FIRE HYDRANT.
3. NEW HYDRANTS TO BE INSTALLED WITH "NOT IN SERVICE" BAG (489-04-99-11). INSTALL ON HYDRANT UNTIL HYDRANT IS CLEARED AND ACCEPTED BY FIRE DEPARTMENT. SEE SECTION 481.4.6.6
4. NEW FIRE HYDRANTS TO BE FACTORY PAINTED RED. EXISTING HYDRANTS THAT REQUIRE REPAINTING TO BE PRESSURE WASHED (3000 PSI) TO REMOVE ALL LOOSE DEBRIS,PAINT OR OTHER FOREIGN MATERIALS. REPAINT HYDRANT IN ACCORDANCE WITH MANUFACTURERS RECOMMENDATIONS. FINISH PAINT TO BE RUST-OLEUM 639K7764402, "SAFETY RED" OR EQUIVALENT.
5. PROVIDE ONE BLUE REFLECTIVE PAVEMENT MARKER (RPM) IN THE CENTER OF THE CLOSEST VEHICLE TRAVEL LANE AND DIRECTLY OPPOSITE THE HYDRANT LOCATION.
5. FOR NEW HYDRANT INSTALLATION WHERE THE HYDRANT WILL BE INSTALLED ON THE OPPOSITE SIDE OF THE ROAD FROM THE WATER MAIN, SEE "TYPE C" FIRE HYDRANT INSTALLATION.

DATE REVISED: *JULY 10, 2009*			SECTION 488-1.1
Water & Sewer Department Utilities Division (352) 351-6772	CITY OF OCALA STANDARD DETAIL	FIRE HYDRANT ASSEMBLY	E
		8" SERVICE LINE	SHT 1 OF 1

\\sharedept\Clust3\Water_sd-WS-Engineering\Water & Sewer Construction Manual\August 2012\Details\Water-Rev. April 2011\48811E 071009.dwg, 11/8/2016 1:19:17 PM

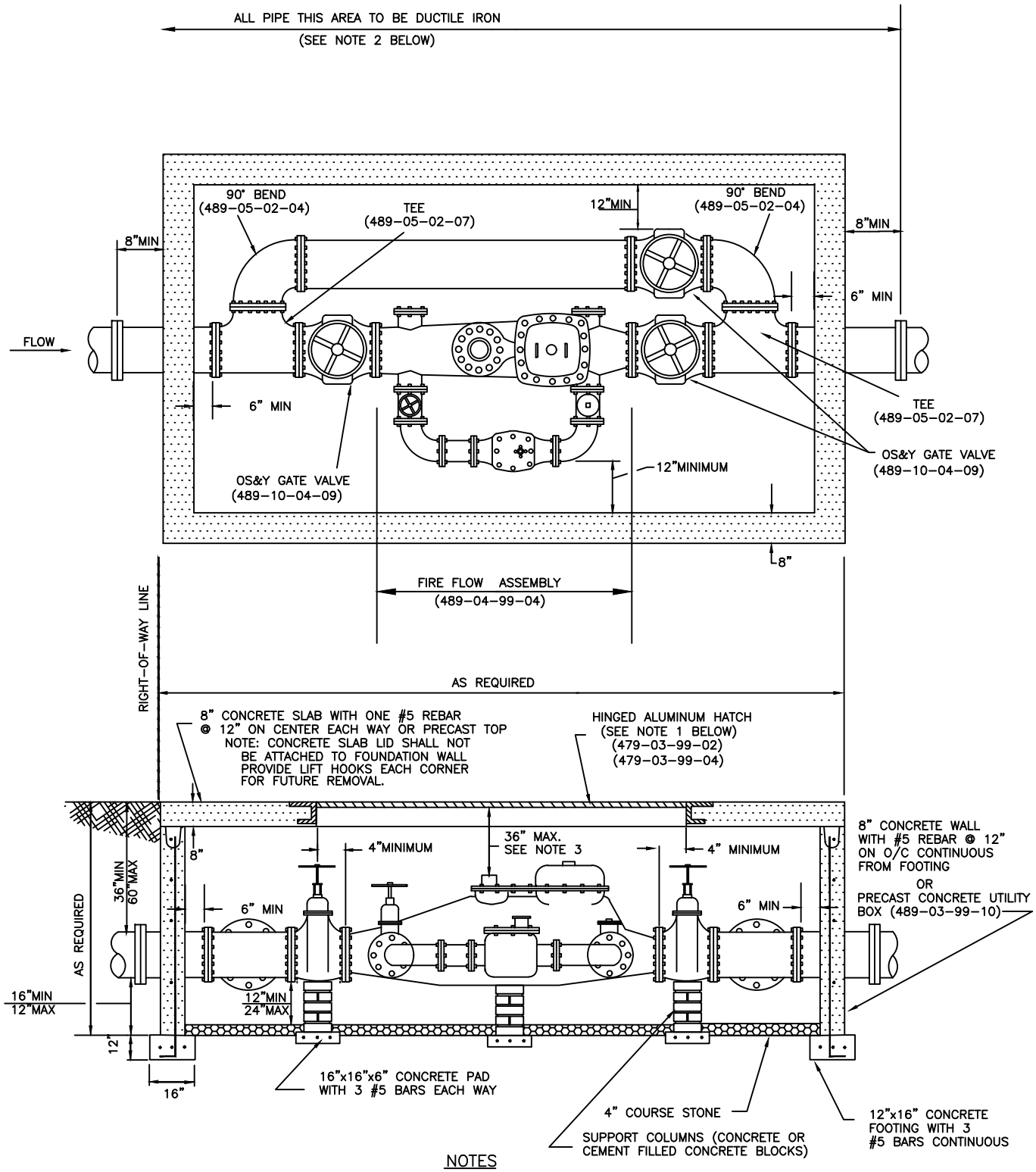

NOTES

1. ALUMINUM HATCH TO BE SIZED SO AS TO PROVIDE A MINIMUM OF 4" CLEARANCE ALL SIDES FOR REMOVAL OF FIRE FLOW ASSEMBLY FROM PIT.
2. UNLESS OTHERWISE NOTED, ALL EXPOSED FITTINGS SHALL BE FLANGED AND ALL BURIED FITTINGS SHALL BE MECHANICAL JOINT.
3. METER INSTALLATION GREATER THAN 36" BELOW TOP OF LID REQUIRES INSTALLATION OF A REMOTE READING DEVICE (489-06-99-10) AS SPECIFIED IN 488-9.1A.

DATE REVISED: *AUGUST 7, 2012*			SECTION 488-1.2
Water & Sewer Department Utilities Division (352) 351-6772	CITY OF OCALA STANDARD DETAIL	FIRE FLOW ASSEMBLY BELOW GROUND-TRAFFIC LID	A SHT 1 OF 1

\\sharedept\Clust3\Water_sd-WS-Engineering\Water & Sewer Construction Manual\August 2012\Details\Water-Rev. April 2011\48812A 080712.dwg, 11/8/2016 1:19:21 PM

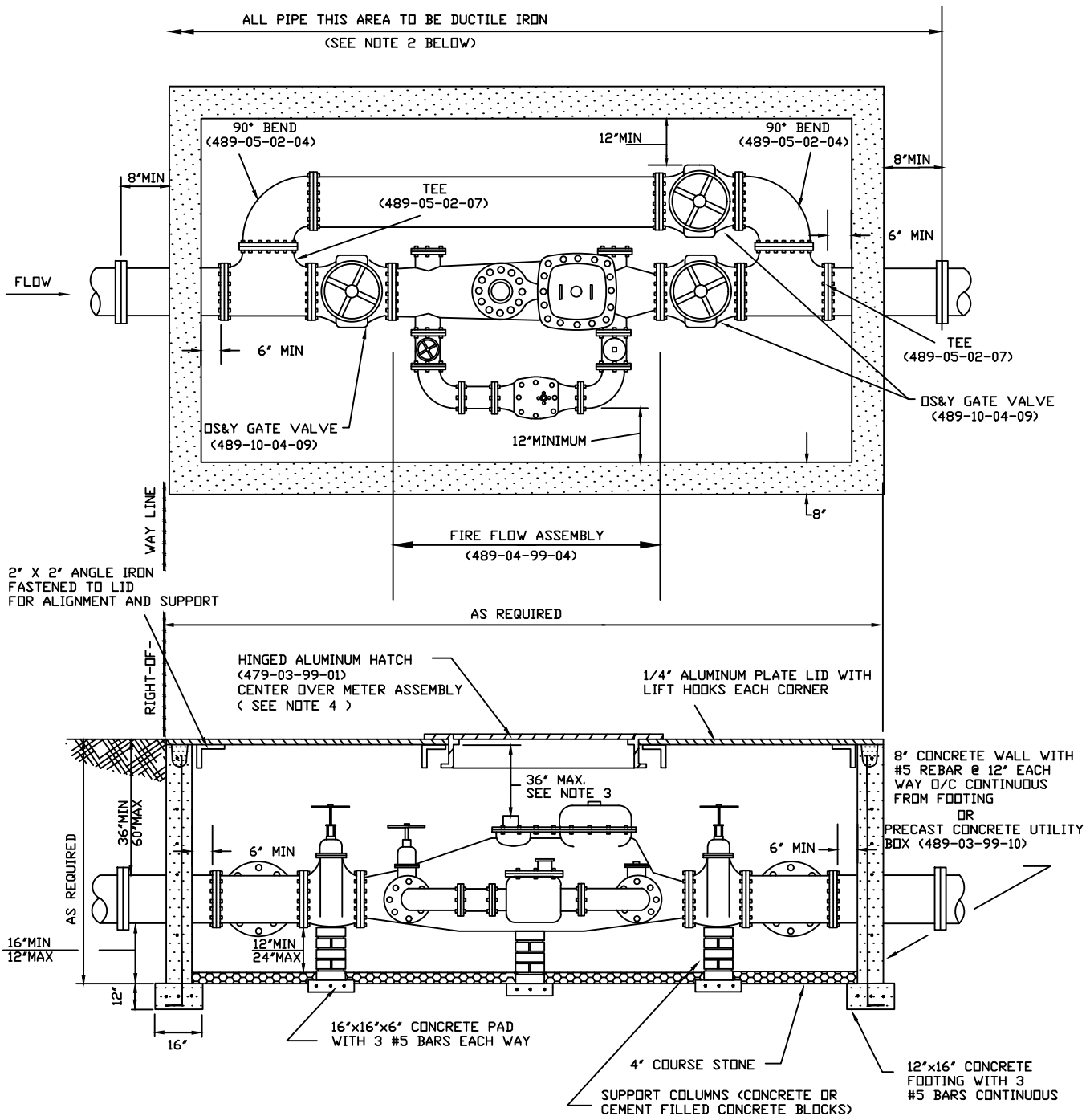

NOTES

1. INSTALL BOLTS TO SECURE LID IN EACH CORNER.
2. UNLESS OTHERWISE NOTED, ALL EXPOSED FITTINGS SHALL BE FLANGED AND ALL BURIED FITTINGS SHALL BE MECHANICAL JOINT.
3. METER INSTALLATION GREATER THAN 36" BELOW TOP OF LID REQUIRES INSTALLATION OF A REMOTE READING DEVICE (489-06-99-10) AS SPECIFIED IN 488-9.1A
4. ALUMINUM HATCH TO BE SIZED SO AS TO PROVIDE 4" CLEARANCE ON ALL SIDES FOR REMOVAL OF EQUIPMENT.

DATE REVISED: *DECEMBER 18, 2012*			SECTION 488-1.2
Water & Sewer Department Utilities Division (352) 351-6772	CITY OF OCALA STANDARD DETAIL	FIRE FLOW ASSEMBLY BELOW GROUND WITH NON-TRAFFIC LID	B SHT 1 OF 1

\\sharedept\Clust3\Water_sd-WS-Engineering\Water & Sewer Construction Manual\August 2012\Details\Water-Rev. April 2011\48812B 121812.dwg, 11/8/2016 1:19:25 PM

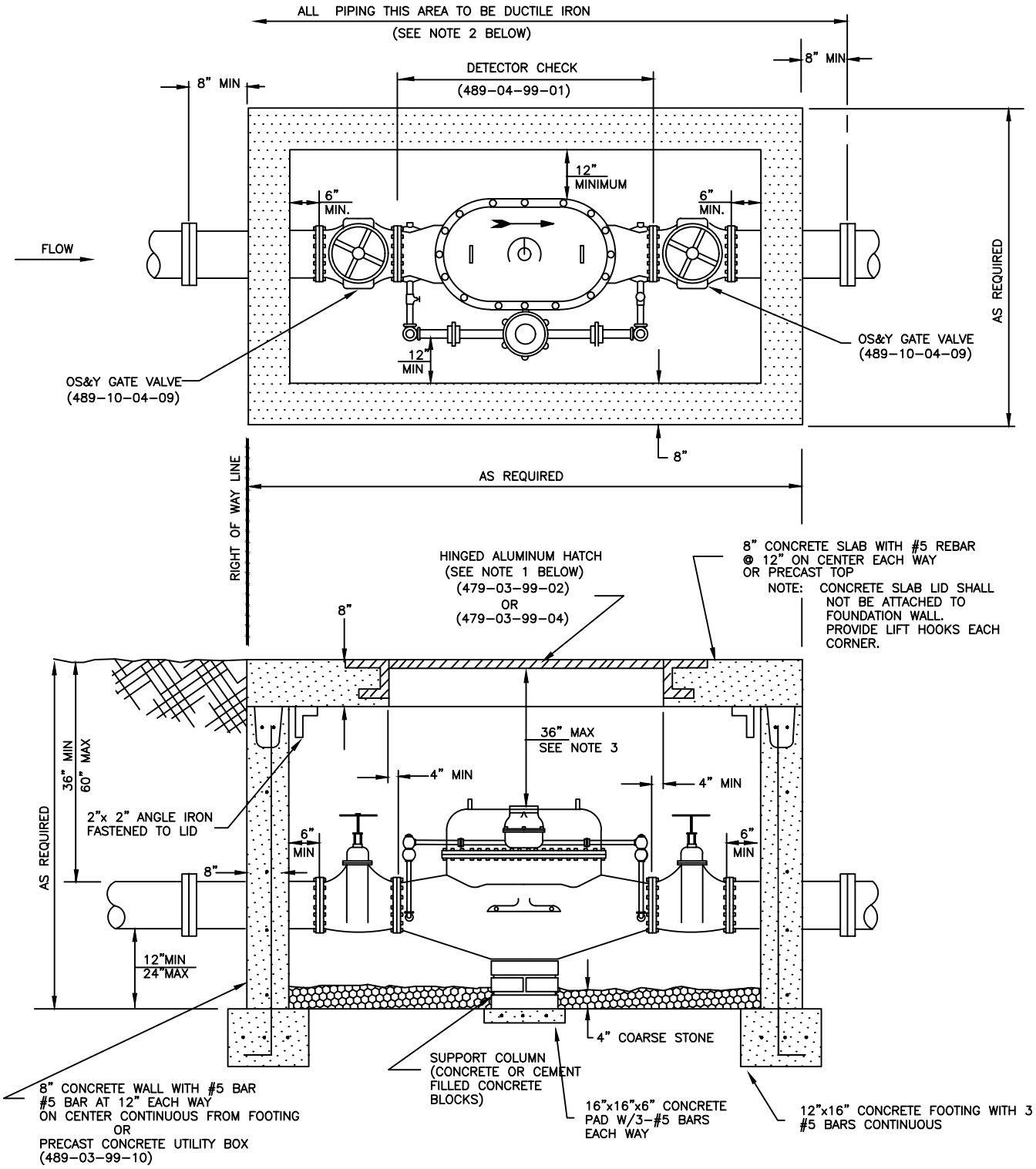

NOTES

1. ALUMINUM HATCH SHALL BE SIZED SO AS TO PROVIDE A MINIMUM OF 4" CLEARANCE ALL SIDES FOR REMOVAL OF DETECTOR CHECK ASSEMBLY.
2. UNLESS OTHERWISE NOTED, ALL EXPOSED FITTINGS SHALL BE FLANGED AND ALL BURIED FITTINGS SHALL BE MECHANICAL JOINT.
3. METER INSTALLATION GREATER THAN 36" BELOW TOP OF LID REQUIRES INSTALLATION OF A REMOTE READING DEVICE (489-06-99-10) AS SPECIFIED IN 488-9.1A.
4. SINGLE DETECTOR CHECK ASSEMBLY ONLY TO BE USED AS SPECIFICALLY AUTHORIZED BY THE WATER AND SEWER ENGINEER.

DATE REVISED: *AUGUST 7, 2012*			SECTION 488-1.3
Water & Sewer Department Utilities Division (352) 351-6772	CITY OF OCALA STANDARD DETAIL	SINGLE DETECTOR CHECK ASSEMBLY	A
		BELOW GROUND-TRAFFIC LID	SHT 1 OF 1

\\sharedept\Clust3\Water_sd-WS-Engineering\Water & Sewer Construction Manual\August 2012\Details\Water-Rev. April 2011\48813A 080712.dwg, 11/8/2016 1:19:28 PM

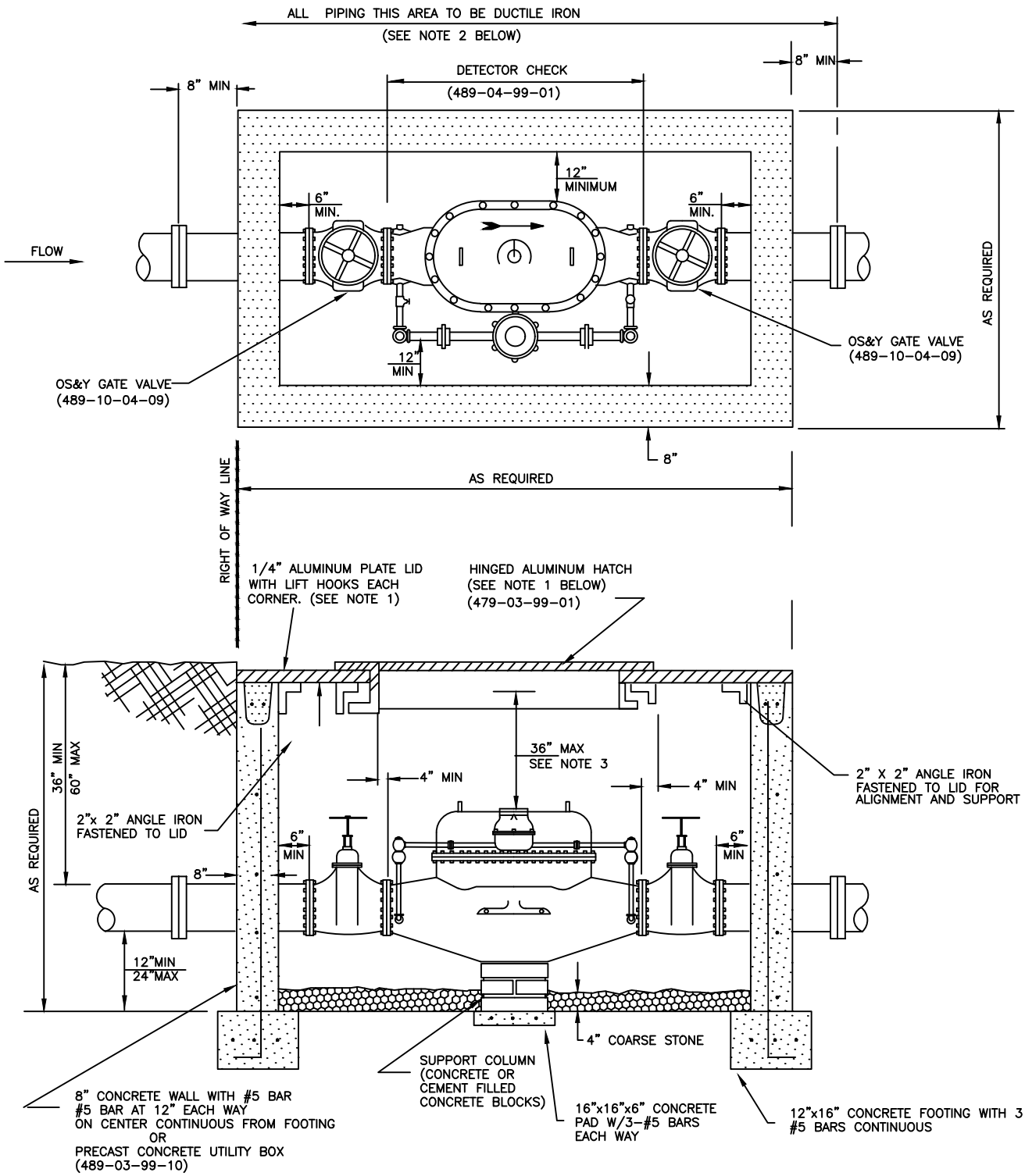

NOTES

1. ALUMINUM HATCH SHALL BE SIZED SO AS TO PROVIDE A MINIMUM OF 4" CLEARANCE ALL SIDES FOR REMOVAL OF DETECTOR CHECK ASSEMBLY.
2. UNLESS OTHERWISE NOTED, ALL EXPOSED FITTINGS SHALL BE FLANGED AND ALL BURIED FITTINGS SHALL BE MECHANICAL JOINT.
3. METER INSTALLATION GREATER THAN 36" BELOW TOP OF LID REQUIRES INSTALLATION OF A REMOTE READING DEVICE (489-06-99-10) AS SPECIFIED IN 488-9.1A.
4. SINGLE DETECTOR CHECK ASSEMBLY ONLY TO BE USED AS SPECIFICALLY AUTHORIZED BY THE WATER AND SEWER ENGINEER.

DATE REVISED: *AUGUST 7, 2012*			SECTION 488-1.3
Water & Sewer Department Utilities Division (352) 351-6772	CITY OF OCALA STANDARD DETAIL	SINGLE DETECTOR CHECK ASSEMBLY BELOW GROUND-TRAFFIC LID	B SHT 1 OF 1

\\sharedept\Clust3\Water_sd-WS-Engineering\Water & Sewer Construction Manual\August 2012\Details\Water-Rev. April 2011\48813B 070812.dwg, 11/8/2016 1:19:32 PM

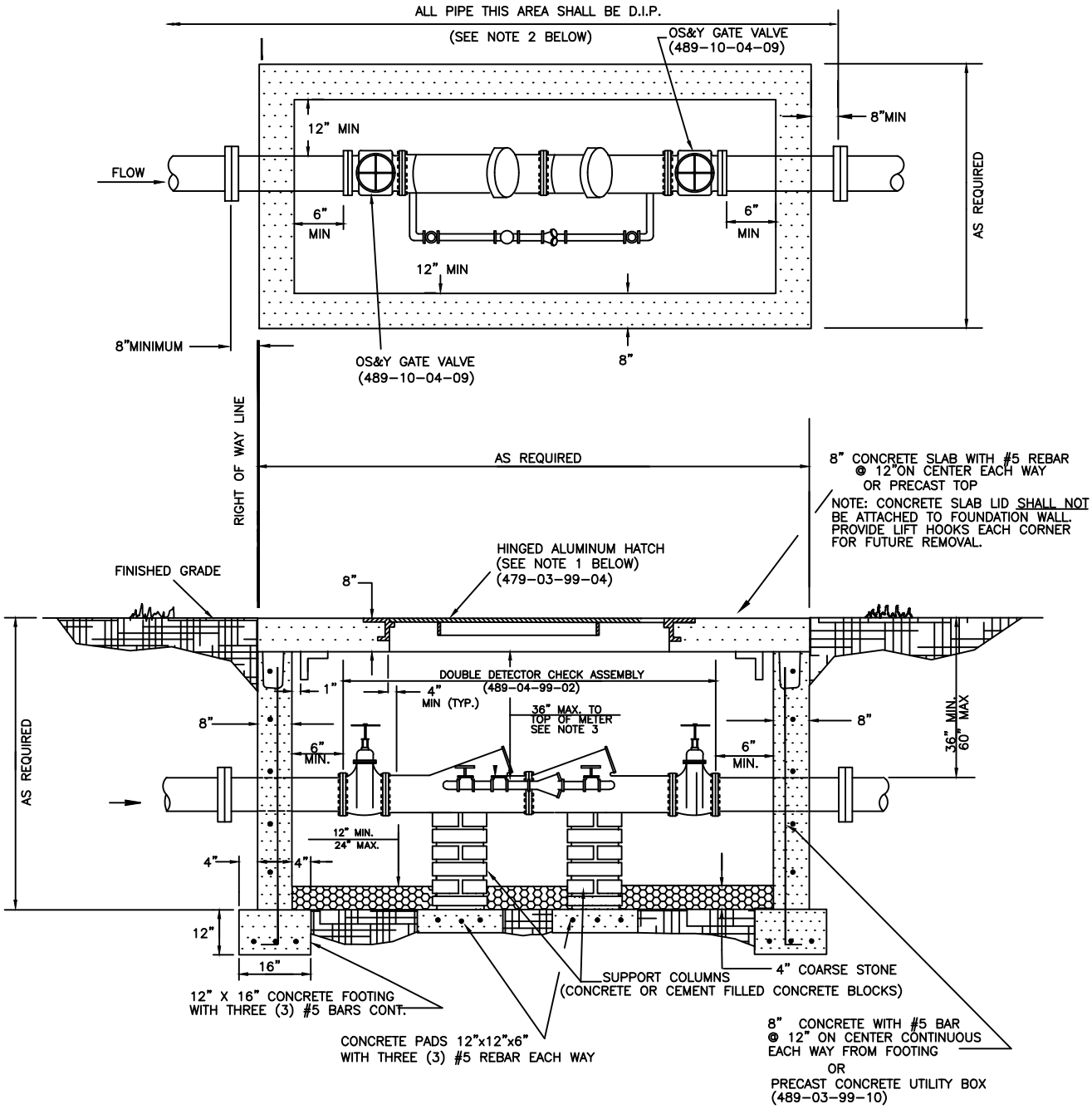

NOTES

1. ALUMINUM HATCH SHALL BE SIZED SO AS TO PROVIDE MINIMUM OF 4" CLEARANCE ALL SIDES FOR REMOVAL OF DETECTOR CHECK ASSEMBLY
2. UNLESS OTHERWISE NOTED, ALL EXPOSED FITTINGS SHALL BE FLANGED AND ALL BURIED FITTINGS SHALL BE MECHANICAL JOINT.
3. METER INSTALLATIONS GREATER THAN 36" BELOW TOP OF LID REQUIRES INSTALLATION OF A REMOTE READING DEVICE (489-06-99-10) AS SPECIFIED IN 488-9.1A.
4. DOUBLE DETECTOR CHECK ASSEMBLY ONLY TO BE USED AS SPECIFICALLY AUTHORIZED BY THE WATER AND SEWER ENGINEER.

DATE REVISED: *AUGUST 7, 2012*			SECTION 488-1.3
Water & Sewer Department Utilities Division (352) 351-6772	CITY OF OCALA STANDARD DETAIL	DOUBLE DETECTOR CHECK ASSEMBLY	C
		BELOW GROUND-TRAFFIC LID	SHT 1 OF 1

\\sharedept\Clust3\Water_sd-WS-Engineering\Water & Sewer Construction Manual\August 2012\Details\Water-Rev. April 2011\48813C 080712.dwg, 11/8/2016 1:19:36 PM

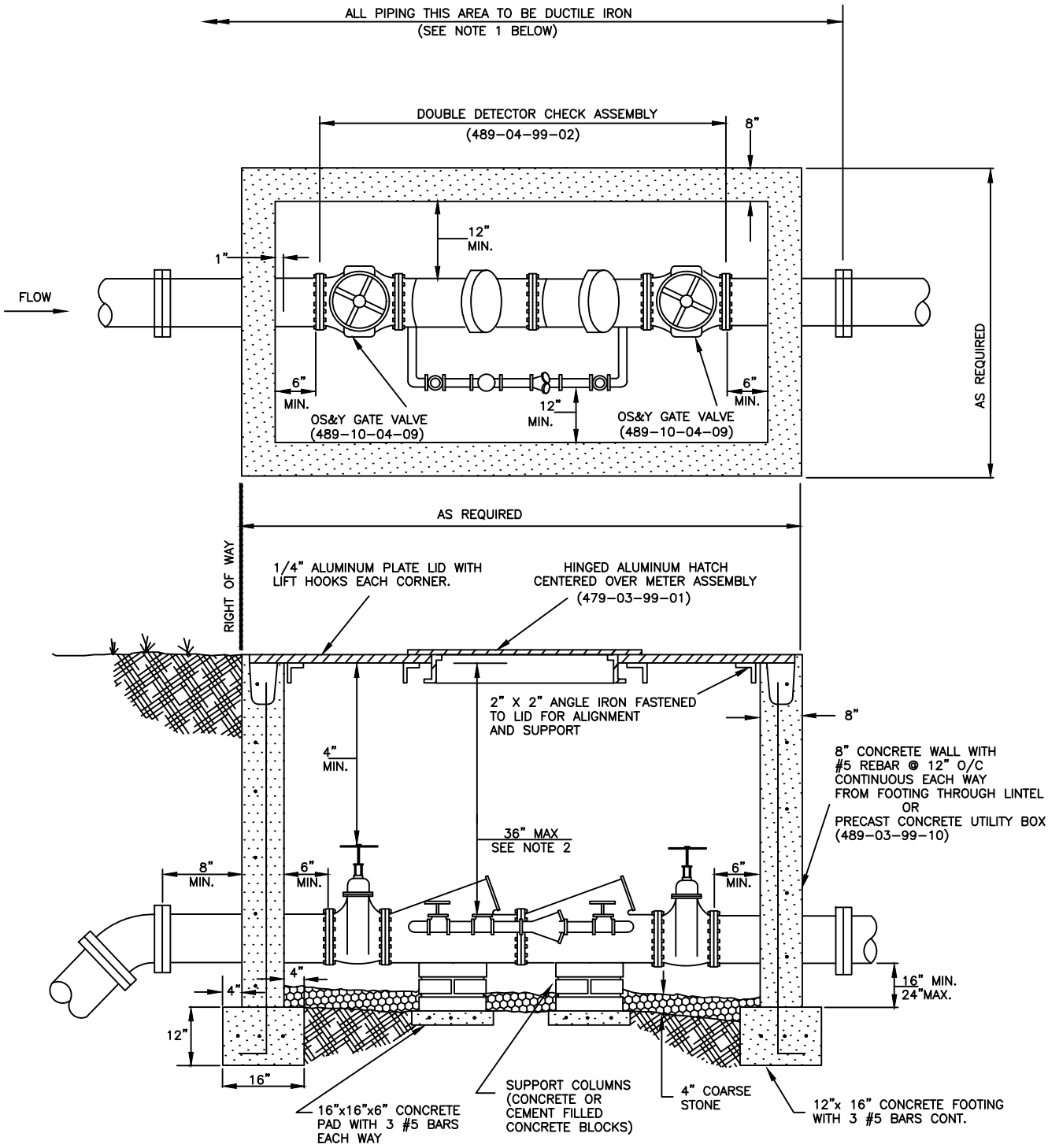

NOTES

1. UNLESS OTHERWISE NOTED, ALL EXPOSED FITTINGS SHALL BE FLANGED AND ALL BURIED FITTINGS SHALL BE MECHANICAL JOINT.
2. METER INSTALLATION GREATER THAN 36" BELOW TOP OF LID REQUIRES INSTALLATION OF A REMOTE READING DEVICE (498-06-99-10) AS SPECIFIED IN 488-9.1A.
3. ALUMINUM HATCH SHALL BE SIZED TO PROVIDE 4" CLEARANCE ON ALL SIDES FOR REMOVAL OF EQUIPMENT.
4. SINGLE DETECTOR CHECK ASSEMBLY ONLY TO BE USED AS SPECIFICALLY AUTHORIZED BY THE WATER AND SEWER ENGINEER.

DATE REVISED: *AUGUST 7, 2012*			SECTION 488-1.3
Water & Sewer Department Utilities Division (352) 351-6772	CITY OF OCALA STANDARD DETAIL	DOUBLE DETECTOR CHECK ASSEMBLY	D
		BELOW GROUND NON TRAFFIC LID	SHT 1 OF 1

\\sharedept\Clust3\Water_sd-WS-Engineering\Water & Sewer Construction Manual\August 2012\Details\Water-Rev. April 2011\48813D 080712.dwg, 11/8/2016 1:19:40 PM

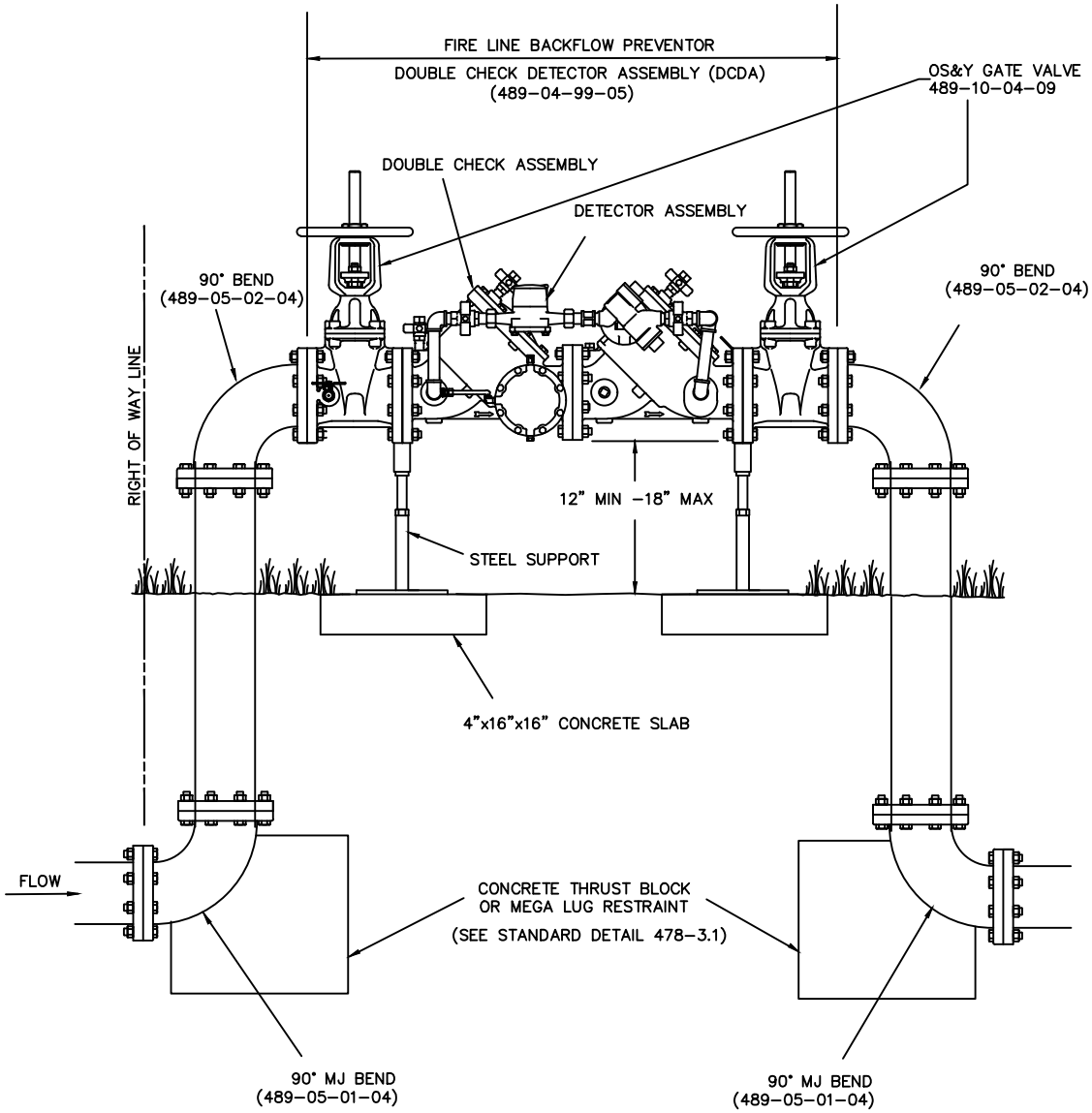

NOTES

1. ALL ABOVE-GROUND PARTS OF THE BACKFLOW PREVENTOR ASSEMBLY, INCLUDING PIPEING, SHALL BE PAINTED RED. PAINT SHALL BE POLYURETHANE, "SAFETY RED" OR EQUIVALENT.
2. ISOLATION VALVES SHALL BE CHAINED LOCKED IN THE OPEN POSITION.
3. BACKFLOW PREVENTOR ASSEMBLY SHALL BE PROTECTED WITH TAMPER SWITCHES AND TIES INTO THE FIRE ALARM SYSTEM.
4. NO LANDSCAPING OR OBSTRUCTIONS ARE PERMITTED WITHIN THE CLEAR ZONE. CLEAR ZONE TO BE 24" EACH SIDE OF CENTERLINE AND 12" EACH END. ANY LANDSCAPING INSTALLED AROUND THE DCDA SHALL BE INSTALLED SO AS TO PROVIDE MINIMUM CLEARANCES AT MATURITY OF THE PLANTINGS.
5. UNLESS OTHERWISE NOTED, ALL EXPOSED FITTINGS SHALL BE FLANGED AND ALL BURIED FITTINGS SHALL BE MECHANICAL JOINT.

DATE REVISED: *DECEMBER18,2012*			SECTION 488-1.3
Water & Sewer Department Utilities Division (352) 351-6772	CITY OF OCALA STANDARD DETAIL	FIRE LINE DOUBLE CHECK DETECTOR ASSEMBLY 3" OR GREATER	F SHT 1 OF 1

\\sharedept\Clust3\Water_sd-WS-Engineering\Water & Sewer Construction Manual\August 2012\Details\Water-Rev. April 2011\48813F 121812.dwg, 11/8/2016 1:19:45 PM

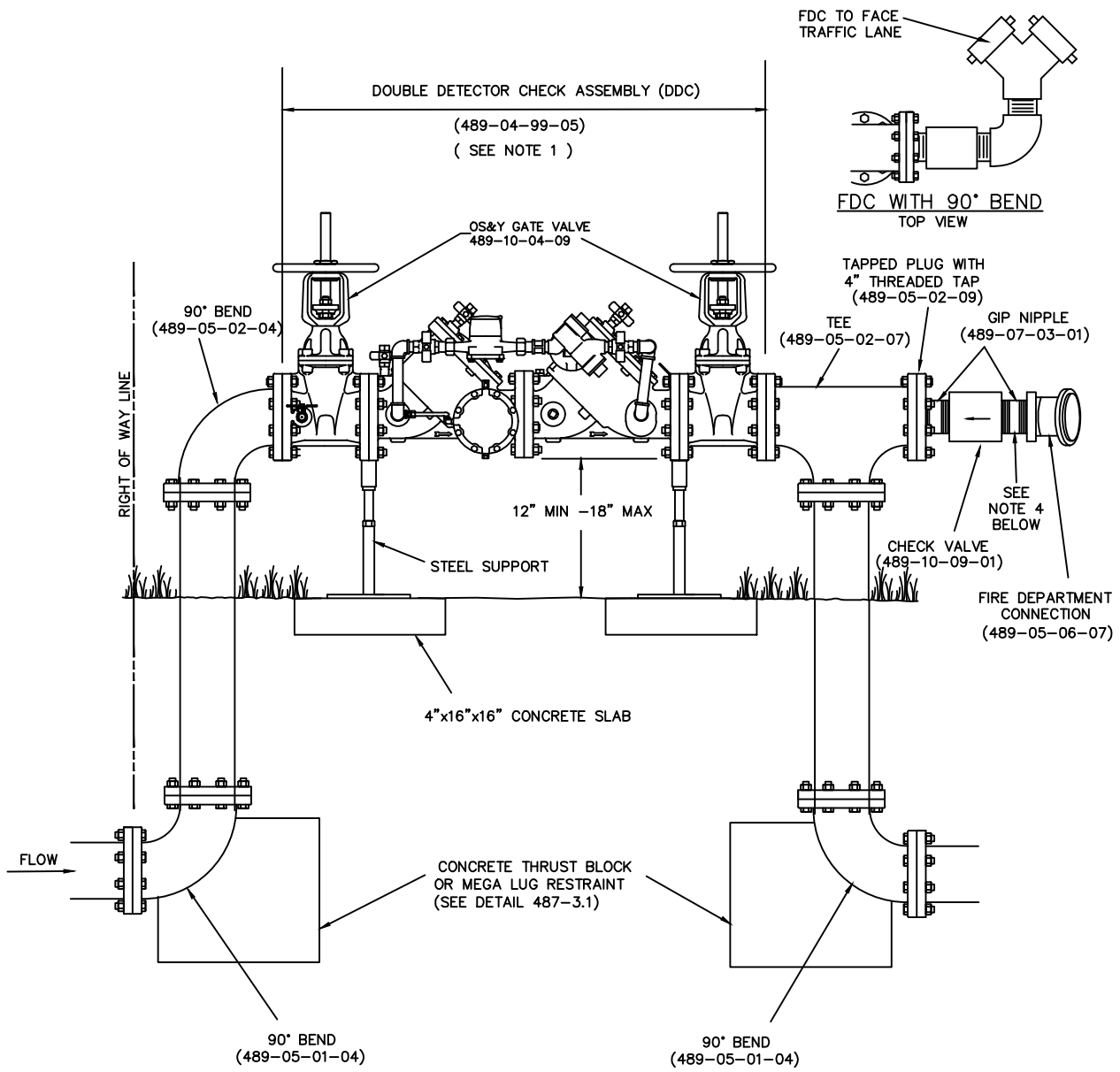

NOTES

1. CONTACT CITY FIRE MARSHAL FOR REQUIREMENTS FOR TAMPER SWITCHES, CHAINS, ETC.
2. FDC SHALL BE LOCATED NEAR OR ORIENTED FACING VEHICULAR TRAFFIC LANES, FULLY VISIBLE, RECOGNIZABLE AND ACCESSIBLE FROM THE TRAVEL LANE OR NEAREST POINT OF FIRE DEPT. APPARATUS.
3. PROVIDE A CLEAR ZONE OF 4' TO REAR AND 7-1/2' TO THE FRONT AND SIDES OF THE FDC.
4. IF REQUIRED PROVIDE 90° BEND BETWEEN CHECK VALVE AND FDC TO ORIENT FDC TOWARDS TRAVEL LANE.
5. ALL ABOVE GROUND PARTS OF THE ASSEMBLY, INCLUDING PIPING, SHALL BE PAINTED RED. PAINT SHALL BE POLYURETHANE, "SAFETY RED" OR EQUIVALENT.
6. UNLESS OTHERWISE NOTED, ALL EXPOSED FITTINGS SHALL BE FLANGED AND ALL BURIED FITTINGS SHALL BE MECHANICAL JOINT.

DATE REVISED: *DECEMBER18,2012*			SECTION 488-1.3
Water & Sewer Department Utilities Division (352) 351-6772	CITY OF OCALA STANDARD DETAIL	FIRE LINE BACKFLOW PREVENTOR WITH FDC 3" OR GREATER	G SHT 1 OF 2

\\sharedept\Clust3\Water_sd-WS-Engineering\Water & Sewer Construction Manual\August 2012\Details\Water-Rev. April 2011\48813G1 121812.dwg, 11/8/2016 1:19:49 PM

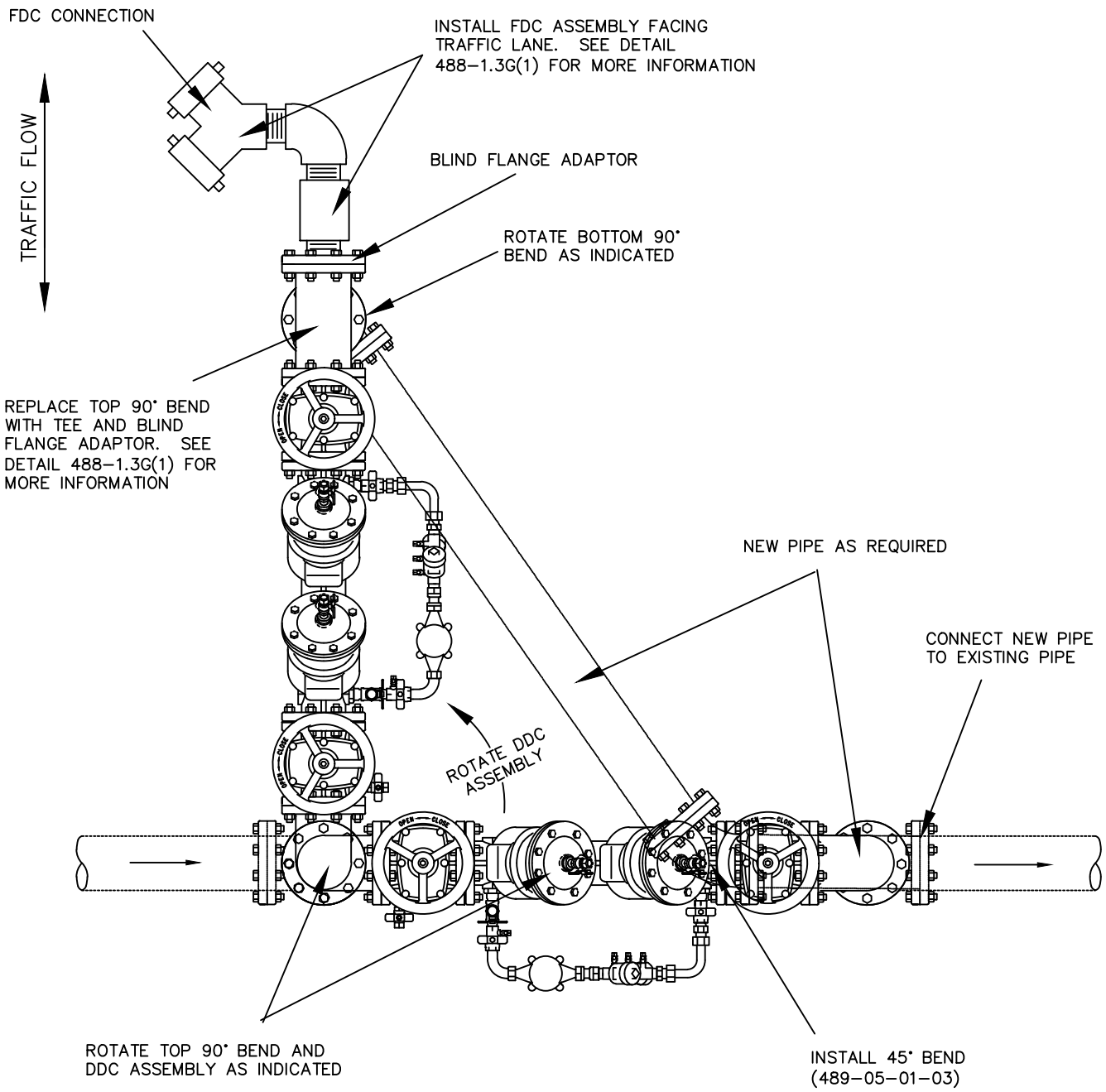

NOTES

1. FOR EXISTING DDC ASSEMBLIES CONTACT CITY FIRE MARSHAL BEFORE RELOCATING DDC ASSEMBLY.
2. REFER TO DETAIL 488-1.3G(1 OF 2) FOR INFORMATION REGARDING ADDITION OF FDC CONNECTION.

DATE REVISED: *APRIL 1, 2010*			SECTION 488-1.3
Water & Sewer Department Utilities Division (352) 351-6772	CITY OF OCALA STANDARD DETAIL	ALTERNATE DDC INSTALLATION WITH NEW FDC CONNECTION	G SHT 2 OF 2

\\sharedept\Clust3\Water_sd-WS-Engineering\Water & Sewer Construction Manual\August 2012\Details\Water-Rev. April 2011\48813G2 040110.dwg, 11/8/2016 1:19:53 PM

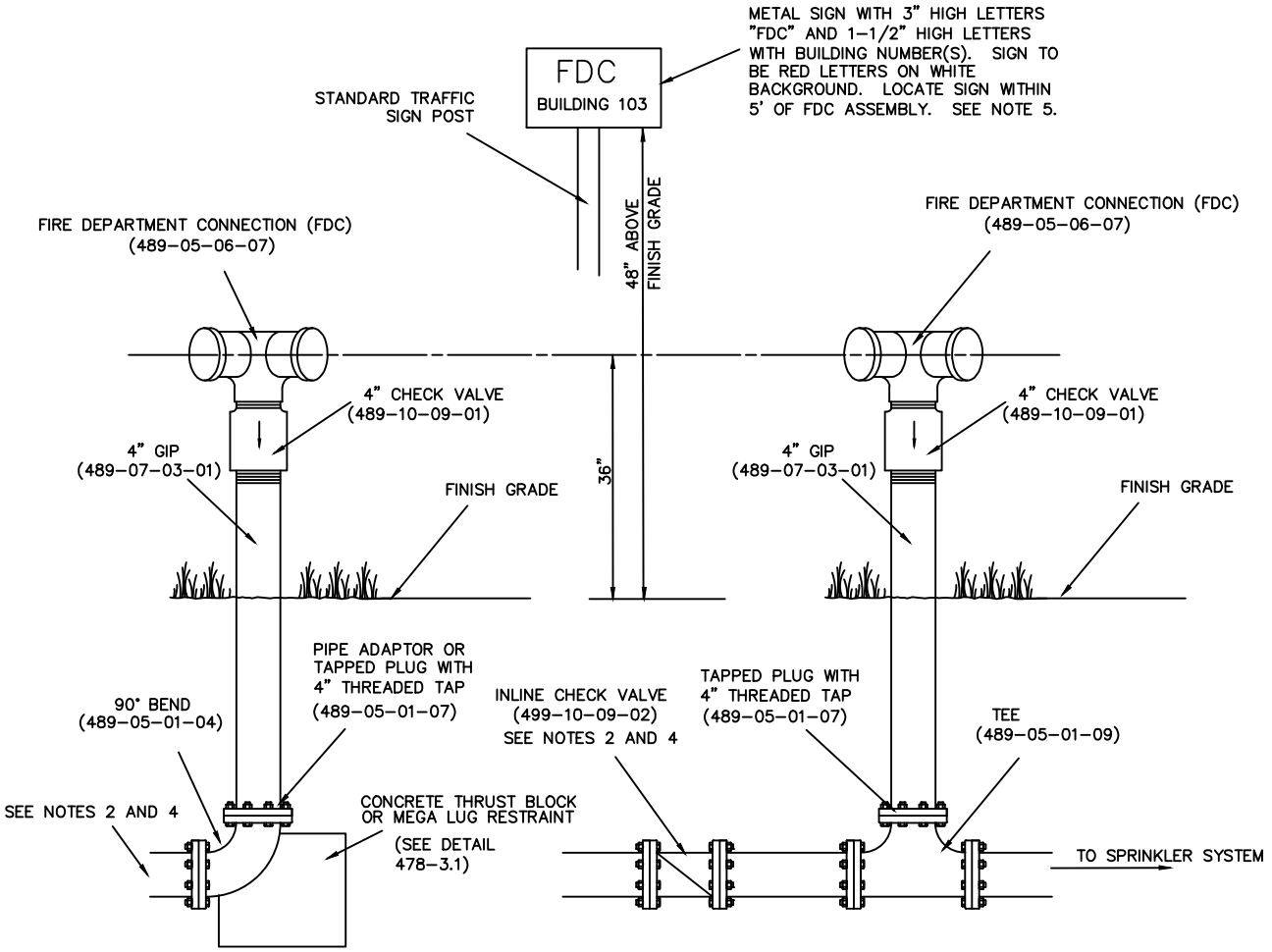

REMOTE FDC CONNECTION

INLINE FDC CONNECTION

NOTES

1. ALL ABOVE-GROUND PARTS OF THE FDC ASSEMBLY, INCLUDING PIPING, SHALL BE PAINTED RED. PAINT SHALL BE POLYURETHANE, "SAFETY RED" OR EQUIVALENT.
2. PROVIDE AN INLINE CHECK VALVE ONLY WHERE FDC CONNECTIONS ARE INSTALLED AND FIRE HYDRANTS ARE CONNECTED UPSTREAM.
3. FDC MAY BE MOUNTED ON DOUBLE CHECK DETECTOR ASSEMBLIES (DCDA). SEE DETAIL WSCM 488-1.3G.
4. WHERE CHECK VALVES ARE INSTALLED BELOW GRADE PROVIDE A PRECAST UTILITY BOX SIZED TO ADEQUATELY MAINTAIN THE CHECK VALVE ASSEMBLY. UTILITY BOX SHALL BE AS SPECIFIED IN 489-03-99-10.
5. PROVIDE A SIGN INDICATING WHAT BUILDING(S) OR UNIT(S) THE FDC CONNECTION SUPPLIES WATER TO.
6. PROVIDE UNOBSTRUCTED CLEAR ZONE AROUND FDC CONNECTION OF 4' TO THE REAR AND 7-1/2' TO SIDES AND FRONT. NO BUILDINGS, FENCES, TREES OR LARGE SHRUBBERY SHALL BE LOCATED IN CLEAR ZONE.

DATE REVISED: *AUGUST 7, 2012*			SECTION 488-1.3
Water & Sewer Department Utilities Division (352) 351-6772	CITY OF OCALA STANDARD DETAIL	FIRE DEPARTMENT CONNECTION 3 " OR GREATER	H SHT 1 OF 1

\\sharedept\Clust3\Water_sd-WS-Engineering\Water & Sewer Construction Manual\August 2012\Details\Water-Rev. April 2011\48813H 080712.dwg, 11/8/2016 1:19:59 PM

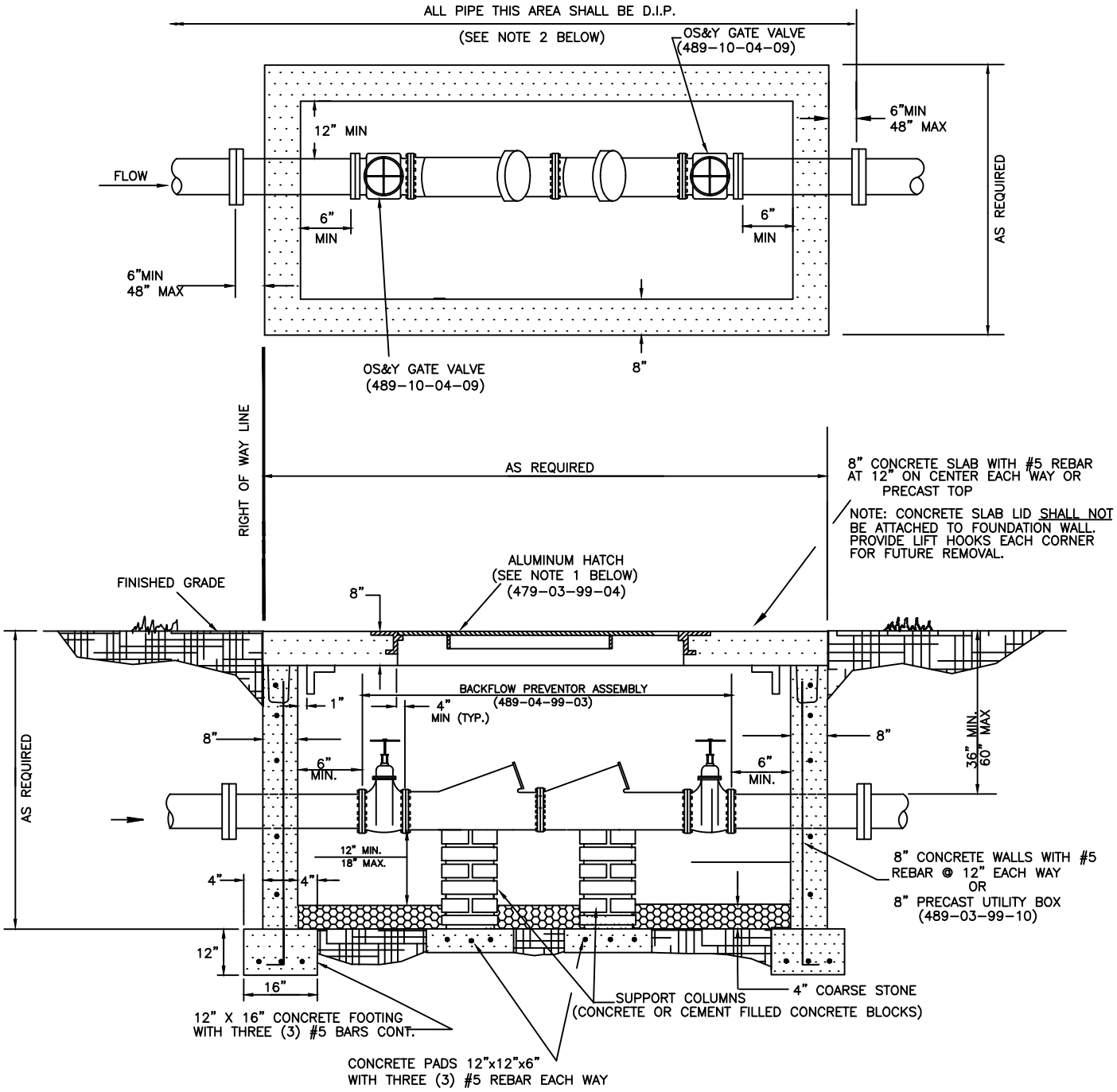

NOTES

1. ALUMINUM HATCH SHALL BE SIZED SO AS TO PROVIDE MINIMUM OF 4" CLEARANCE ALL SIDES FOR REMOVAL OF BACKFLOW PREVENTOR ASSEMBLY.
2. UNLESS OTHERWISE NOTED, ALL EXPOSED FITTINGS SHALL BE FLANGED AND ALL BURIED FITTINGS SHALL BE MECHANICAL JOINT.

DATE REVISED: *AUGUST 7, 2012*			SECTION 488-1.4
Water & Sewer Department Utilities Division (352) 351-6772	CITY OF OCALA STANDARD DETAIL	BACKFLOW PREVENTOR ASSEMBLY BELOW GROUND-TRAFFIC LID	A SHT 1 OF 1

\\sharedept\Clust3\Water_sd-WS-Engineering\Water & Sewer Construction Manual\August 2012\Details\Water-Rev. April 2011\48814A 080712.dwg, 11/8/2016 1:20:02 PM

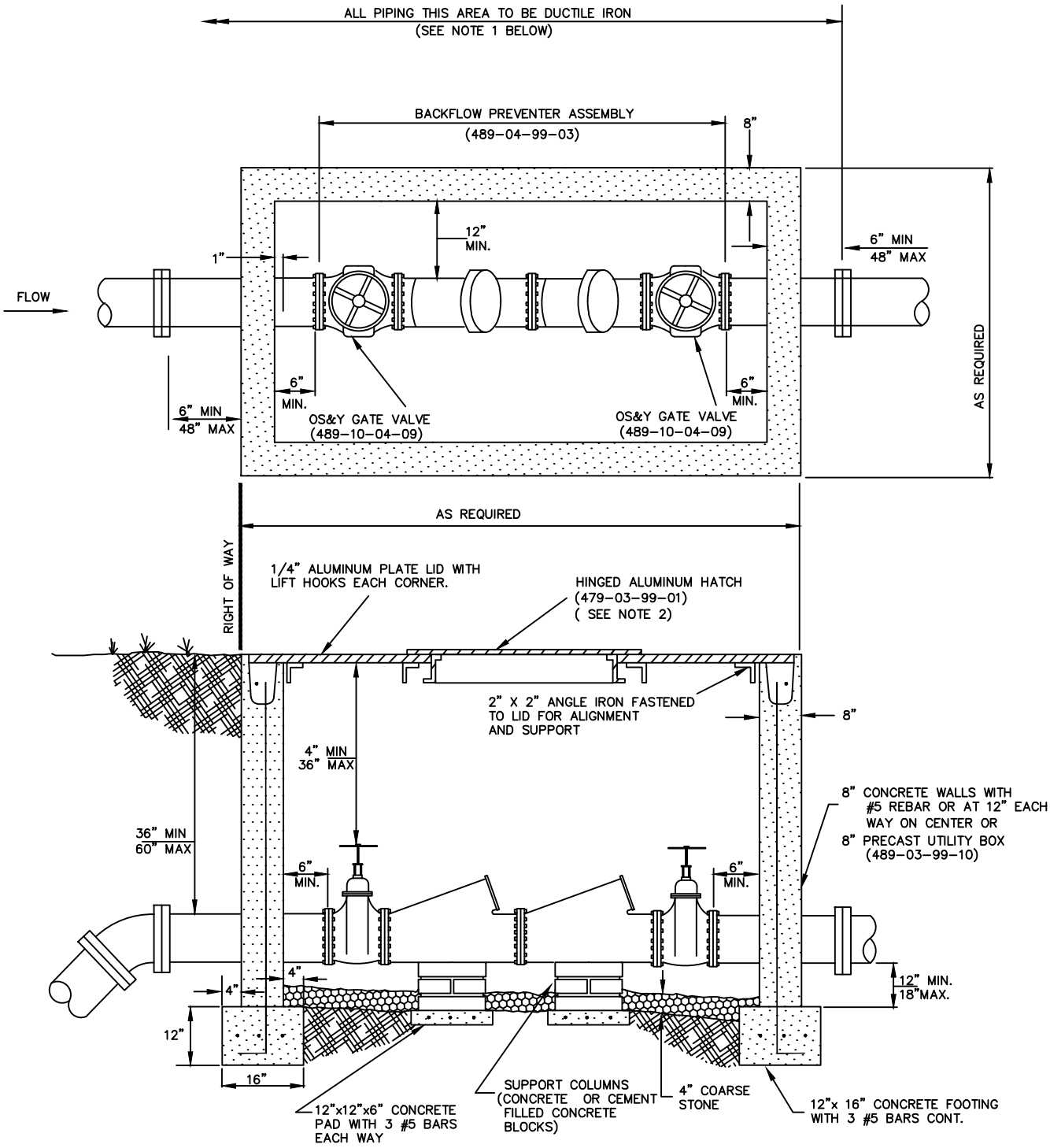

NOTES

1. UNLESS OTHERWISE NOTED, ALL EXPOSED FITTINGS SHALL BE FLANGED AND ALL BURIED FITTINGS SHALL BE MECHANICAL JOINT.
2. ALUMINUM HATCH SHALL BE SIZED TO PROVIDE A MINIMUM OF 4" CLEARANCE ON ALL SIDES FOR REMOVAL OF EQUIPMENT.

DATE REVISED: *DECEMBER 18, 2012*			SECTION 488-1.4
Water & Sewer Department Utilities Division (352) 351-6772	CITY OF OCALA STANDARD DETAIL	BACKFLOW PREVENTOR ASSEMBLY BELOW GROUND NON TRAFFIC LID	B SHT 1 OF 1

\\sharedept\Clust3\Water_sd-WS-Engineering\Water & Sewer Construction Manual\August 2012\Details\Water-Rev. April 2011\48814B 121812.dwg, 11/8/2016 1:20:06 PM

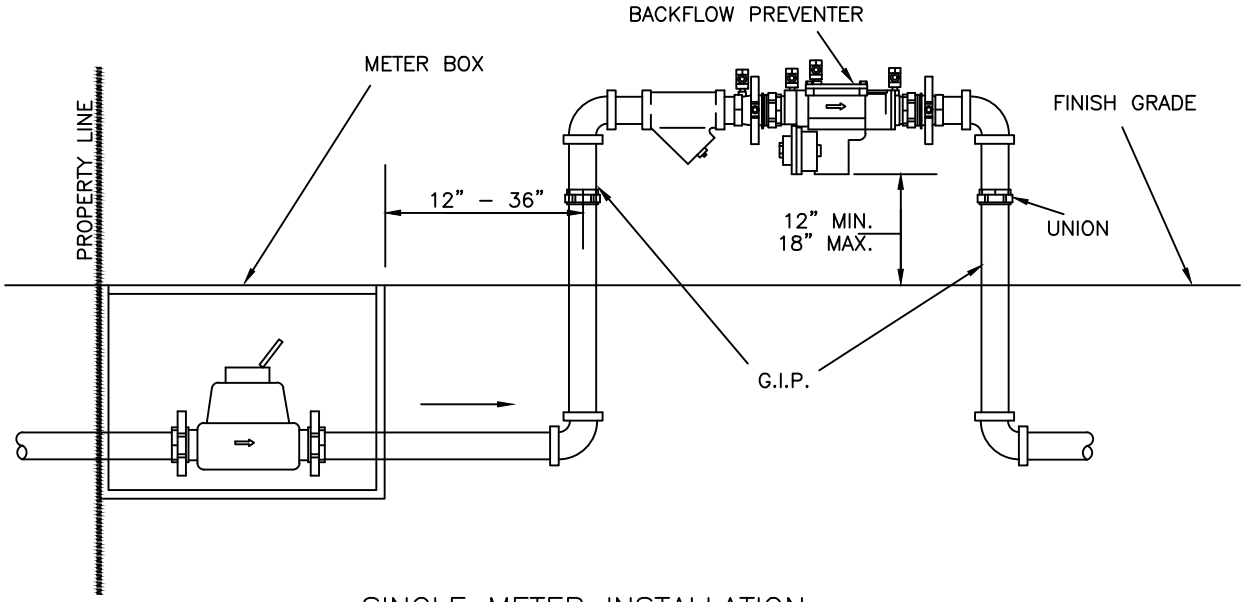

SINGLE METER INSTALLATION

NOTES

1. INSULATE ALL ABOVE GROUND PIPING FOR FREEZE PROTECTION.
2. INSTALL BOLLARDS FOR PROTECTION IN TRAFFIC AREAS.

DATE REVISED: *DECEMBER18,2012*			SECTION 488–1.4
Water & Sewer Department Utilities Division (352) 351–6772	CITY OF OCALA STANDARD DETAIL	SINGLE & MULTI–FAMILY BACKFLOW PREVENTOR INSTALLATION (LESS THAN 3")	C SHT 1 OF 1

\\sharedept\Clust3\Water_sd-WS-Engineering\Water & Sewer Construction Manual\August 2012\Details\Water-Rev. April 2011\48814C 121812.dwg, 11/8/2016 1:20:09 PM

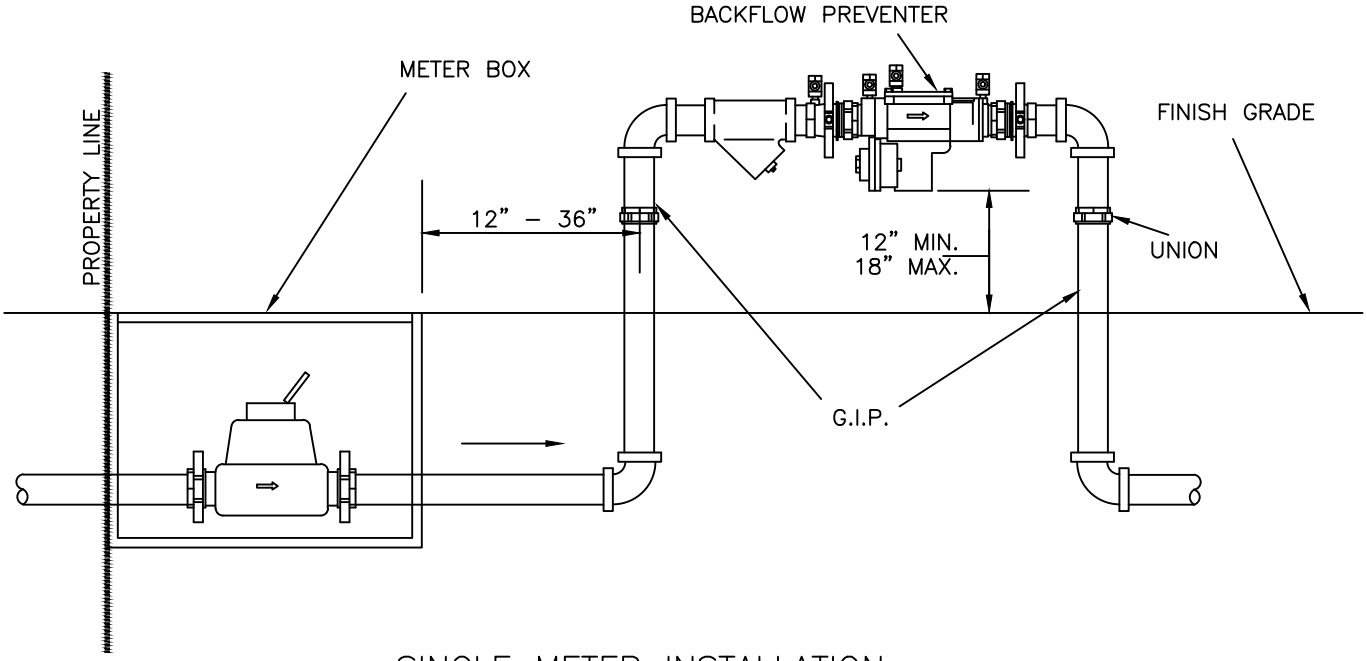

SINGLE METER INSTALLATION

NOTES

1. INSULATE ALL ABOVE GROUND PIPING FOR FREEZE PROTECTION.
2. INSTALL BOLLARDS FOR PROTECTION IN TRAFFIC AREAS.

DATE REVISED: *DECEMBER18,2012*			SECTION 488–1.4
Water & Sewer Department Utilities Division (352) 351–6772	CITY OF OCALA STANDARD DETAIL	COMMERCIAL BACKFLOW PREVENTOR INSTALLATION (LESS THAN 3")	D SHT 1 OF 1

\\sharedept\Clust3\Water_sd-WS-Engineering\Water & Sewer Construction Manual\August 2012\Details\Water-Rev. April 2011\48814D 121812.dwg, 11/8/2016 1:20:13 PM

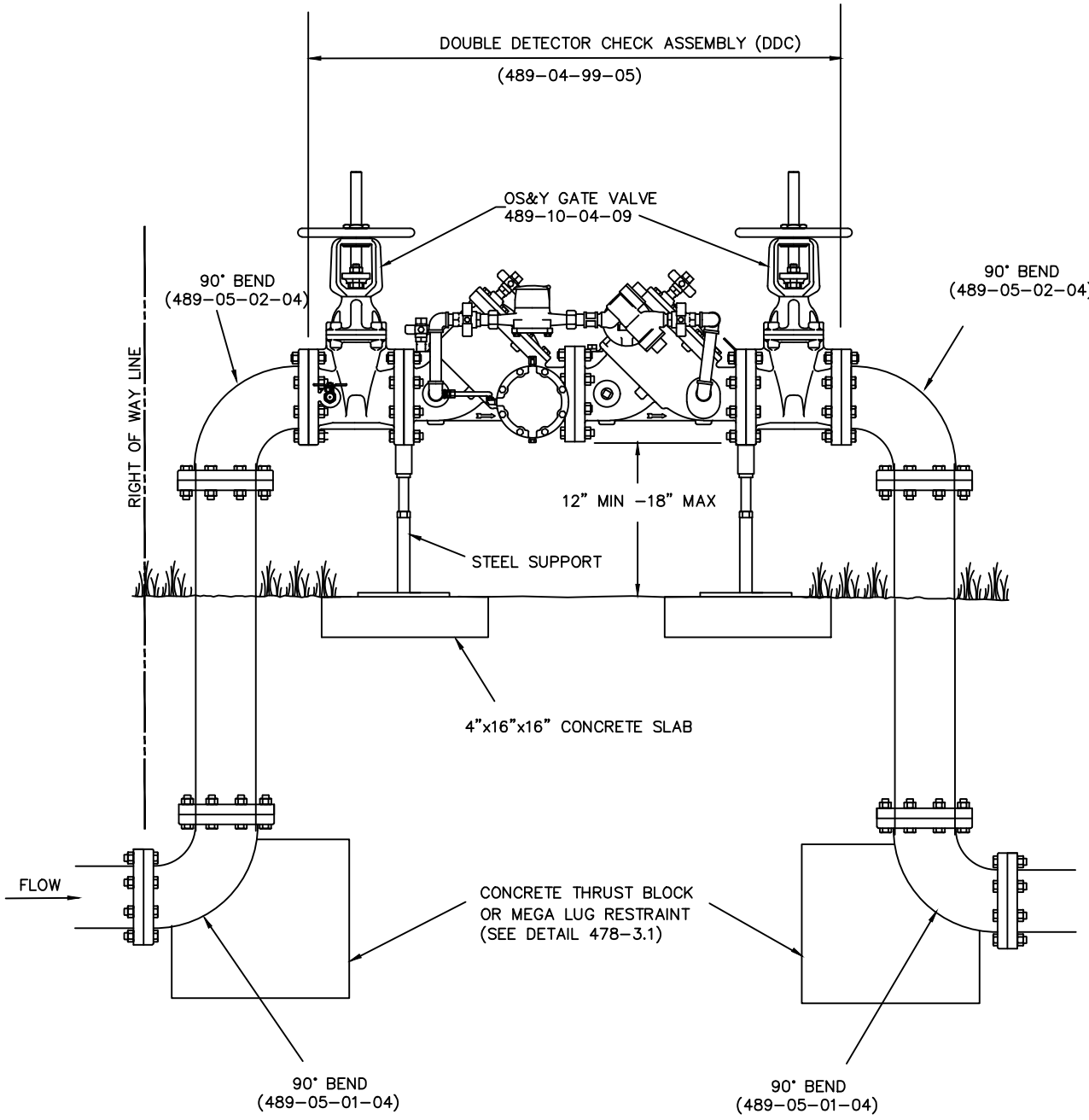

NOTES

1. FOR FIRE LINES CONTACT CITY FIRE DEPARTMENT FOR ADDITIONAL REQUIREMENTS.
2. ALL ABOVE GROUND PARTS OF THE ASSEMBLY, INCLUDING PIPING, SHALL BE PAINTED RED. PAINT SHALL BE POLYURETHANE "SAFETY RED" OR EQUIVALENT.
3. UNLESS OTHERWISE NOTED, ALL EXPOSED FITTINGS SHALL BE FLANGED AND ALL BURIED FITTINGS SHALL BE MECHANICAL JOINT.

DATE REVISED: *DECEMBER18,2012*			SECTION 488-1.4
Water & Sewer Department Utilities Division (352) 351-6772	CITY OF OCALA STANDARD DETAIL	FIRE LINE BACKFLOW PREVENTOR 3" OR GREATER	E SHT 1 OF 1

\\sharedept\Clust3\Water_sd-WS-Engineering\Water & Sewer Construction Manual\August 2012\Details\Water-Rev. April 2011\48814E 121812.dwg, 11/8/2016 1:20:16 PM

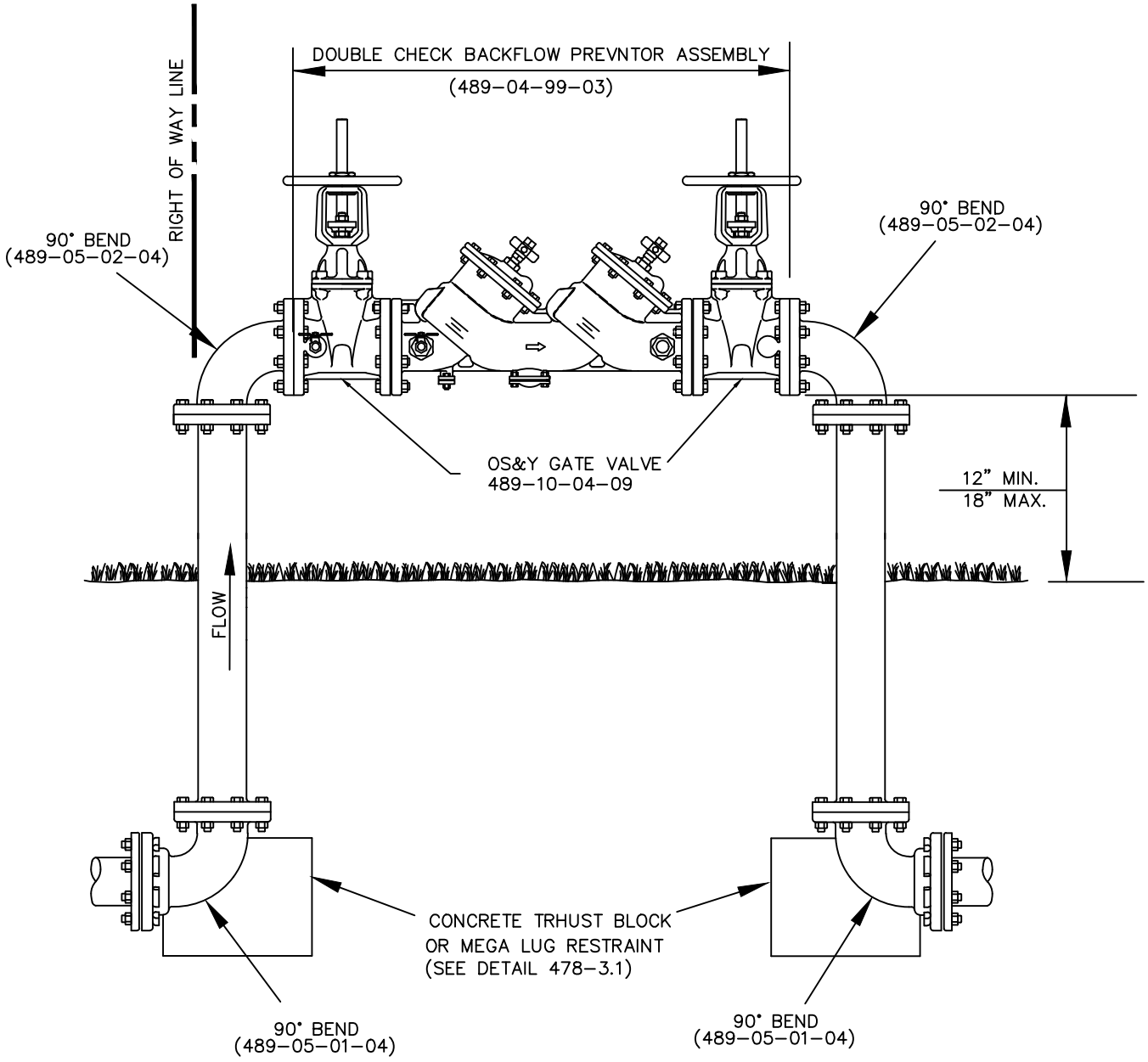

NOTES

1. UNLESS OTHERWISE NOTED, ALL EXPOSED FITTINGS SHALL BE FLANGED AND ALL BURIED FITTINGS SHALL BE MECHANICAL JOINT.

DATE REVISED: *DECEMBER 18, 2012*			SECTION 488-1.4
Water & Sewer Department Utilities Division (352) 351-6772	CITY OF OCALA STANDARD DETAIL	BACKFLOW PREVENTOR 3" AND ABOVE	F SHT 1 OF 1

\\sharedept\Clust3\Water_sd-WS-Engineering\Water & Sewer Construction Manual\August 2012\Details\Water-Rev. April 2011\48814F 121812.dwg, 11/8/2016 1:20:21 PM

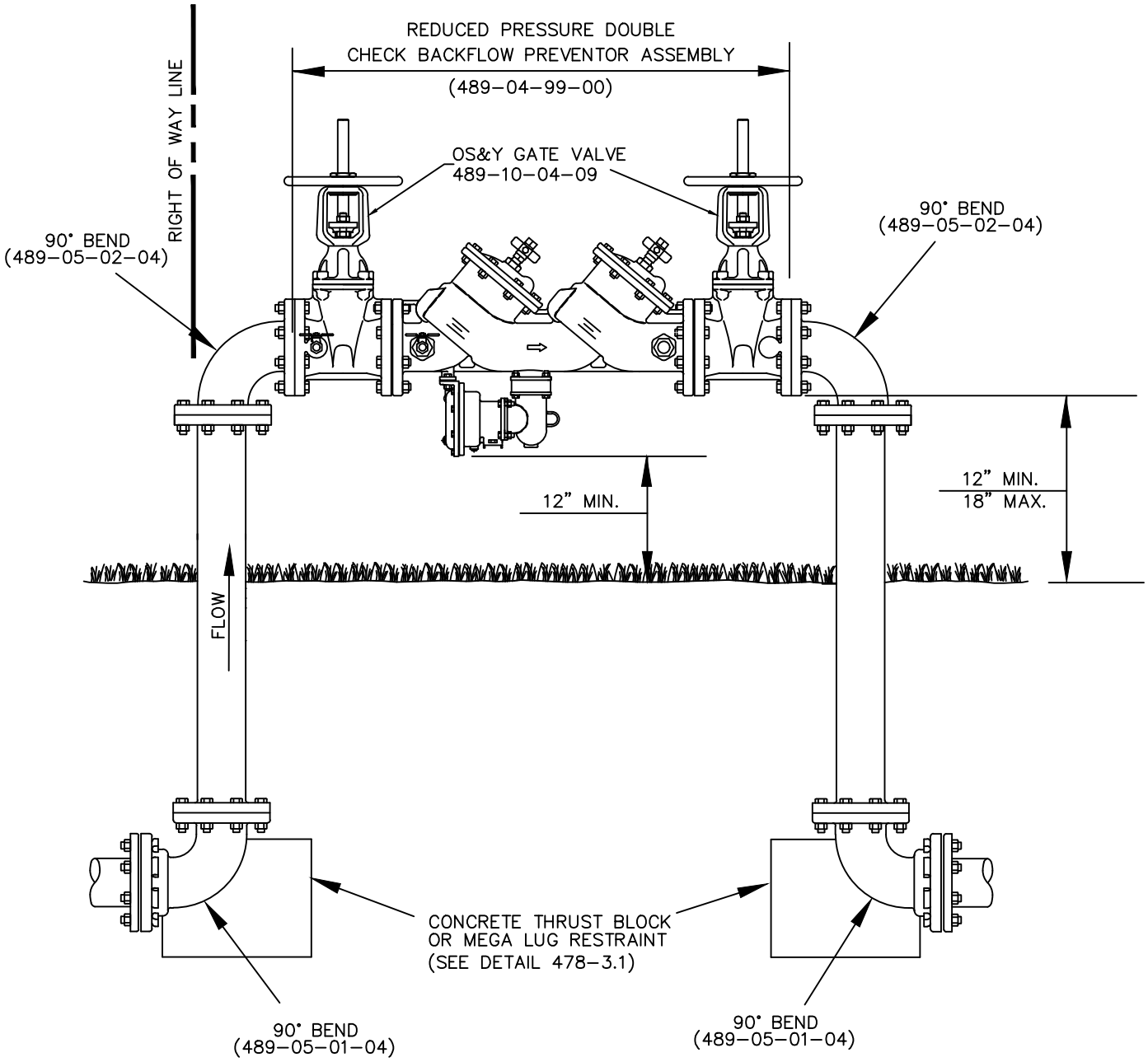

NOTES

1. UNLESSS OTHERWISE NOTED, ALL EXPOSED FITTINGS SHALL BE FLANGED AND ALL BURIED FITTINGS SHALL BE MECHANICAL JOINT.

DATE REVISED: *DECEMBER 18, 2012*			SECTION 488-1.4
Water & Sewer Department Utilities Division (352) 351-6772	CITY OF OCALA STANDARD DETAIL	REDUCED PRESSURE BACKFLOW PREVENTOR 3" AND ABOVE	G SHT 1 OF 1

\\sharedept\Clust3\Water_sd-WS-Engineering\Water & Sewer Construction Manual\August 2012\Details\Water-Rev. April 2011\48814G 121812.dwg, 11/8/2016 1:20:25 PM

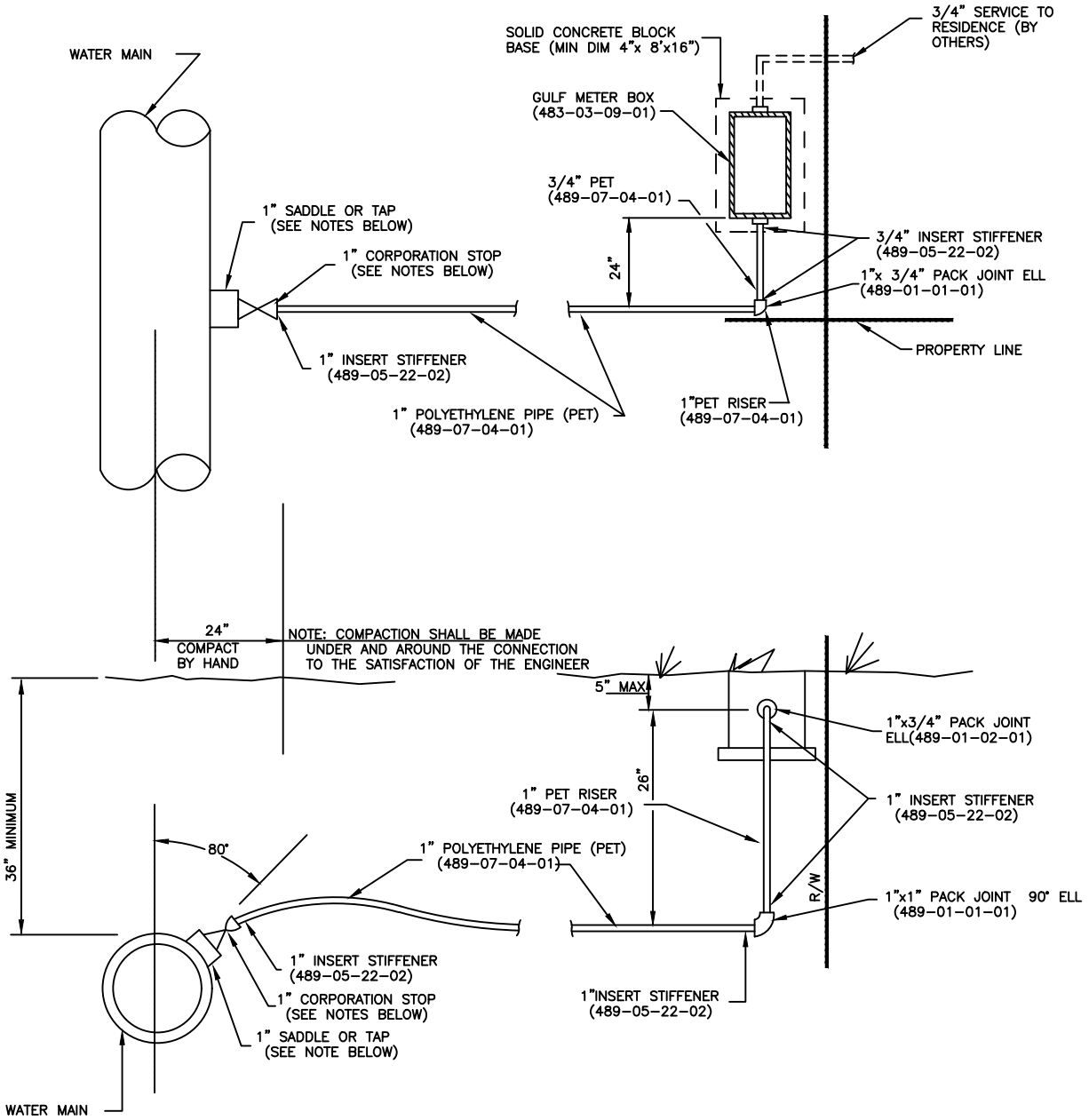

NOTES

1. METER BOXES SET IN PAVEMENT SHALL BE POLYMERE CONCRETE (489-03-09-02) WITH COVER AND METER READERS LID.
2. WATER SERVICE TO BE INSTALLED WITH SOLID COPPER LOCATING WIRE. SEE STANDARD DETAIL 478-7.1 FOR LOCATING WIRE INSTALLATION.
3. ON NEW 2" PVC WATER MAINS, A 2" x 1" TAPPING SADDLE (489-09-02-01) AND 1" CORRPORATION STOP (489-10-02-01) SHALL BE USED WHEN INSTALLING SERVICE CONNECTIONS.
4. ON EXISTING 2" GALVANIZED WATER MAINS, A SERVICE CLAMP (489-09-02-01) AND 1" CORPORATION STOP (489-10-02-02) SHALL BE USED WHEN INSTALLING SERVICE CONNECTIONS.
5. ON NEW OR EXISTING WATER MAINS WITH A DIAMETER OF 6" OR LARGER, A 1" TAP SHALL BE MADE INTO THE MAIN AND A 1" CORPORATION STOP (489-10-02-02) SHALL BE USED WHEN INSTALLING SERVICE CONNECTIONS.
6. THE BRASS EXPANSION CONNECTION SUPPLIED WITH THE METER BOX SHALL BE DELIVERED TO THE INSPECTOR AT THE TIME OF FINAL INSPECTION.
7. LONG SERVICES UNDER PAVEMENT REQUIRE 2" CASING OF PVC, HDPE OR STEEL.

DATE REVISED: *DECEMBER 18, 2012*			SECTION 488-2.1
Water & Sewer Department Utilities Division (352) 351-6772	CITY OF OCALA STANDARD DETAIL	WATER SERVICE SINGLE 3/4" WATER SRVICE	A SHT 1 OF 1

\\sharedept\Clust3\Water_sd-WS-Engineering\Water & Sewer Construction Manual\August 2012\Details\Water-Rev. April 2011\48821A 121812.dwg, 11/8/2016 1:20:32 PM

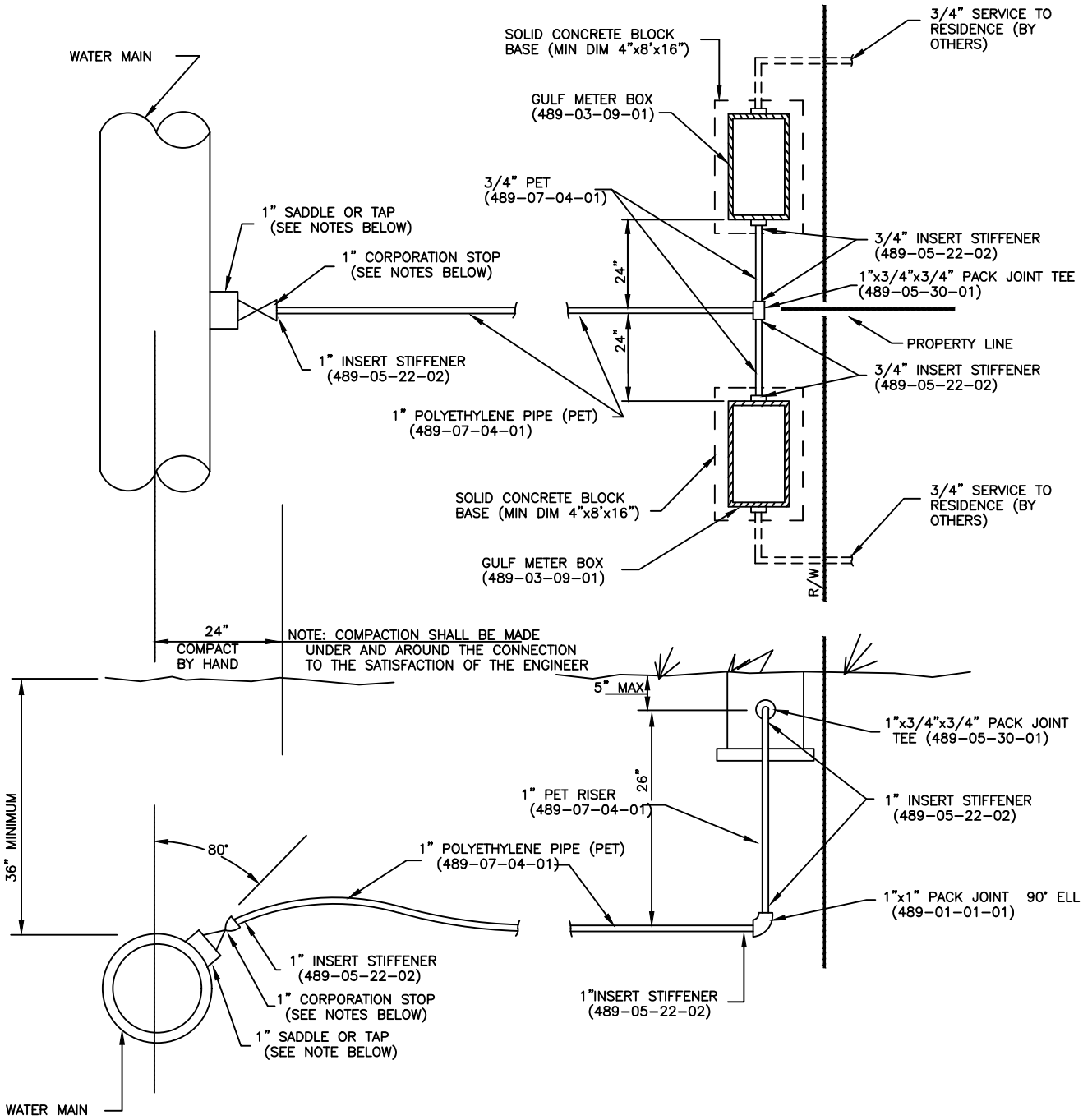

NOTES

1. METER BOXES SET IN PAVEMENT SHALL BE POLYMERE CONCRETE (489-03-09-02) WITH COVER AND METER READERS LID.
2. WATER SERVICE TO BE INSTALLED WITH SOLID COPPER LOCATING WIRE. SEE STANDARD DETAIL 478-7.1 FOR LOCATING WIRE INSTALLATION.
3. ON NEW 2" PVC WATER MAINS, A 2" X 1" TAPPING SADDLE (489-09-02-01) AND A 1" CORPORATION STOP (489-10-02-01) SHALL BE USED WHEN INSTALLING SERVICE CONNECTIONS.
4. ON EXISTING 2" GALVANIZED WATER MAINS, A SERVICE CLAMP (489-09-02-01) AND 1" CORPORATION STOP (489-10-02-02) SHALL BE USED WHEN INSTALLING SERVICE CONNECTIONS.
5. ON NEW OR EXISTING WATER MAINS WITH A DIAMETER LARGER THAN 2", A 1" TAP SHALL BE MADE INTO THE MAIN AND A 1" CORPORATION STOP (489-10-02-02) SHALL BE USED WHEN INSTALLING SERVICE CONNECTIONS.
6. THE BRASS EXPANSION CONNECTION SUPPLIED WITH THE METER BOX SHALL BE DELIVERED TO THE INSPECTOR AT THE TIME OF FINAL INSPECTION.
7. LONG SERVICES UNDER PAVEMENT REQUIRE 2" CASING OF PVC, HDPE OR STEEL.

DATE REVISED: *AUGUST 9, 2012*			SECTION 488-2.1
Water & Sewer Department Utilities Division (352) 351-6772	CITY OF OCALA STANDARD DETAIL	WATER SERVICE DOUBLE 3/4" WATER SERVICE	B SHT 1 OF 1

\\sharedept\Clust3\Water_sd-WS-Engineering\Water & Sewer Construction Manual\August 2012\Details\Water-Rev. April 2011\48821b 080912.dwg, 11/8/2016 1:20:35 PM

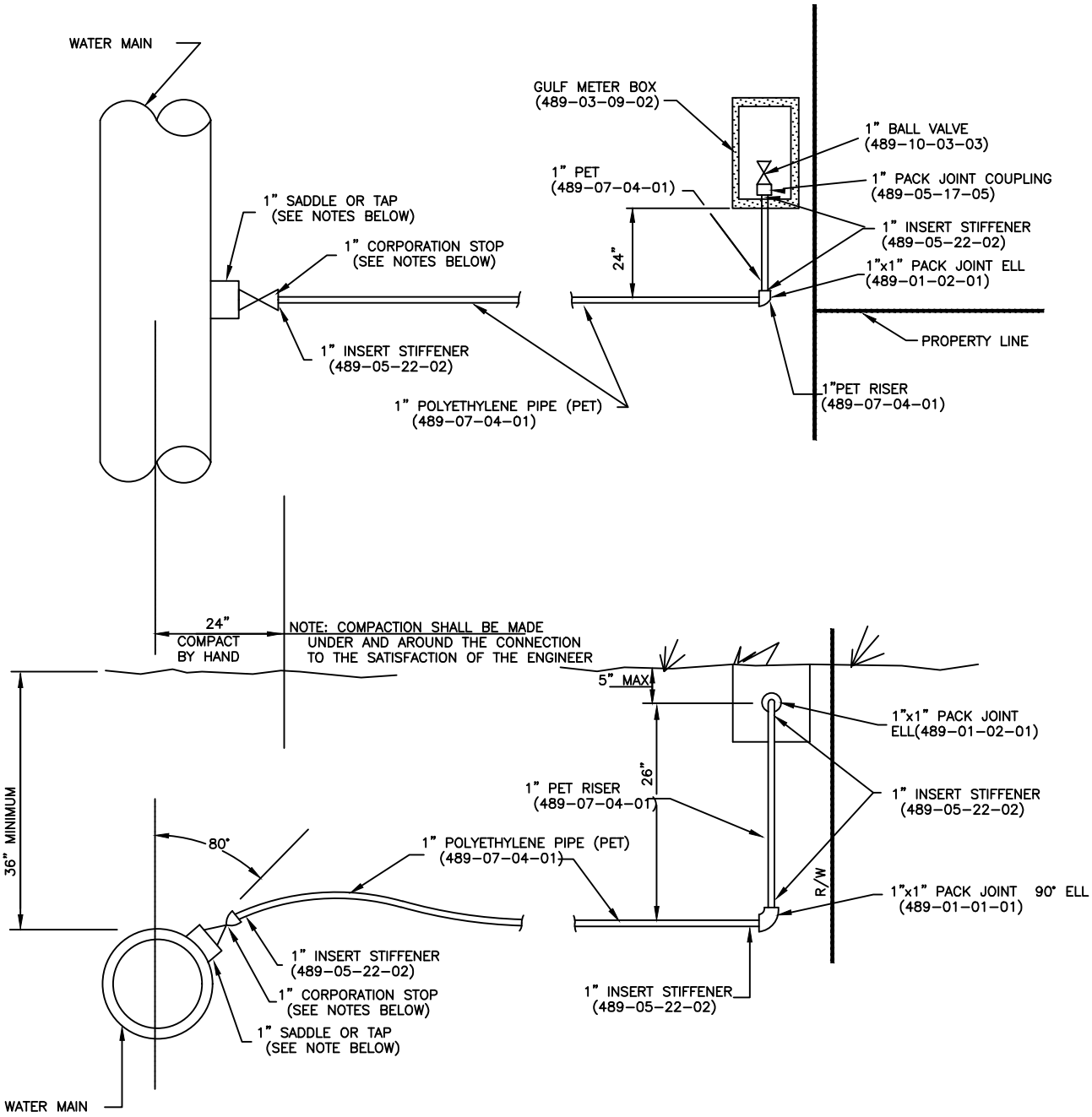

NOTES

1. METER BOXES SET IN PAVEMENT SHALL BE POLYMER CONCRETE (489-03-09-02) WITH COVER AND METER READERS LID.
2. WATER SERVICE TO BE INSTALLED WITH SOLID COPPER LOCATING WIRE. SEE STANDARD DETAIL 478-7.1 FOR LOCATING WIRE INSTALLATION.
3. ON NEW 2" PVC WATER MAINS, A 2" x 1" TAPPING SADDLE (489-09-02-01) AND 1" CORPORATION STOP (489-10-02-01) SHALL BE USED WHEN INSTALLING SERVICE CONNECTIONS.
4. ON EXISTING 2" GALVANIZED WATER MAINS, A SERVICE CLAMP (489-09-02-01) AND 1" CORPORATION STOP (489-10-02-02) SHALL BE USED WHEN INSTALLING SERVICE CONNECTIONS.
5. ON NEW OR EXISTING WATER MAINS WITH A DIAMETER LARGER THAN 2", A 1" TAP SHALL BE MADE INTO THE MAIN AND A 1" CORPORATION STOP (489-10-02-02) SHALL BE USED WHEN INSTALLING SERVICE CONNECTIONS.
6. LONG SERVICES UNDER PAVEMENT REQUIRE 2" CASING OF PVC, HDPE OR STEEL.

DATE REVISED: *AUGUST 9, 2012*			SECTION 488-2.1
Water & Sewer Department Utilities Division (352) 351-6772	CITY OF OCALA STANDARD DETAIL	WATER SERVICE SINGLE 1" WATER SERVICE RESIDENTIAL INSTALLATION	C SHT 1 OF 1

\\sharedept\Clust3\Water_sd-WS-Engineering\Water & Sewer Construction Manual\August 2012\Details\Water-Rev. April 2011\48821c 020413.dwg, 11/8/2016 1:20:39 PM

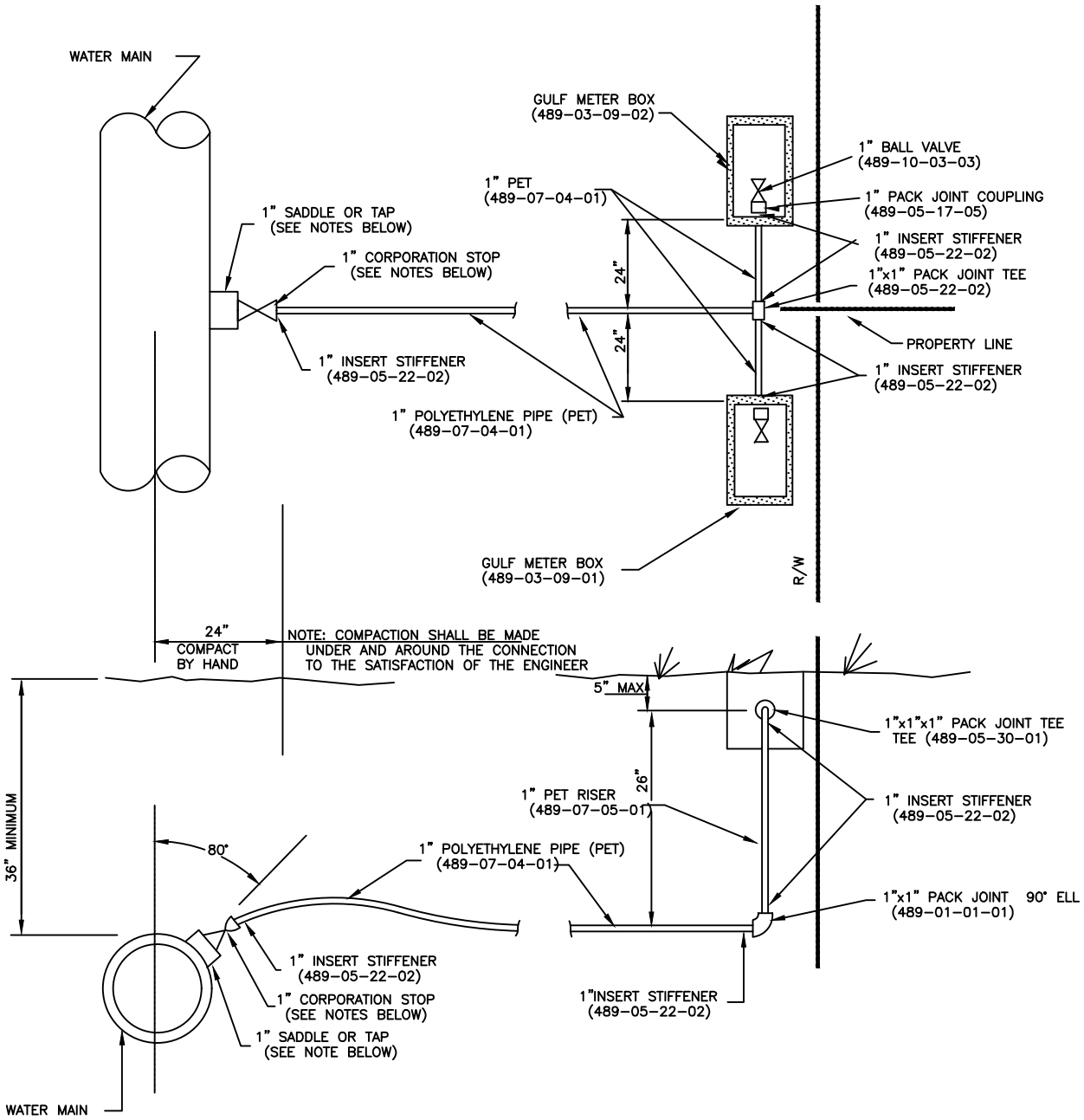

NOTES

1. METER BOXES SET IN PAVEMENT SHALL BE POLYMERE CONCRETE (489-03-09-02) WITH COVER AND METER READERS LID.
2. WATER SERVICE TO BE INSTALLED WITH SOLID COPPER LOCATING WIRE. SEE STANDARD DETAIL 478-7.1 FOR LOCATING WIRE INSTALLATION.
3. ON NEW 2" PVC WATER MAINS, A 2" X 1" TAPPING SADDLE (489-09-05-01) AND A 1" CORPORATION STOP (489-10-02-01) SHALL BE USED WHEN INSTALLING SERVICE CONNECTIONS.
4. ON EXISTING 2" GALVANIZED WATER MAINS, A SERVICE CLAMP (489-09-02-01) AND 1" CORPORATION STOP (489-10-02-02) SHALL BE USED WHEN INSTALLING SERVICE CONNECTIONS.
5. ON NEW OR EXISTING WATER MAINS WITH A DIAMETER LARGER THAN 2", A 1" TAP SHALL BE MADE INTO THE MAIN AND A 1" CORPORATION STOP (489-10-02-02) SHALL BE USED WHEN INSTALLING SERVICE CONNECTIONS.
6. LONG SERVICES UNDER PAVEMENT REQUIRE 2" CASING OF PVC, HDPE OR STEEL.

DATE REVISED: *DECEMBER 18, 2012*			SECTION 488-2.1
Water & Sewer Department Utilities Division (352) 351-6772	CITY OF OCALA STANDARD DETAIL	WATER SERVICE DOUBLE 1" WATER SERVICE RESIDENTIAL INSTALLATION	D SHT 1 OF 1

\\sharedept\Clust3\Water_sd-WS-Engineering\Water & Sewer Construction Manual\August 2012\Details\Water-Rev. April 2011\48821d 121812.dwg, 11/8/2016 1:20:42 PM

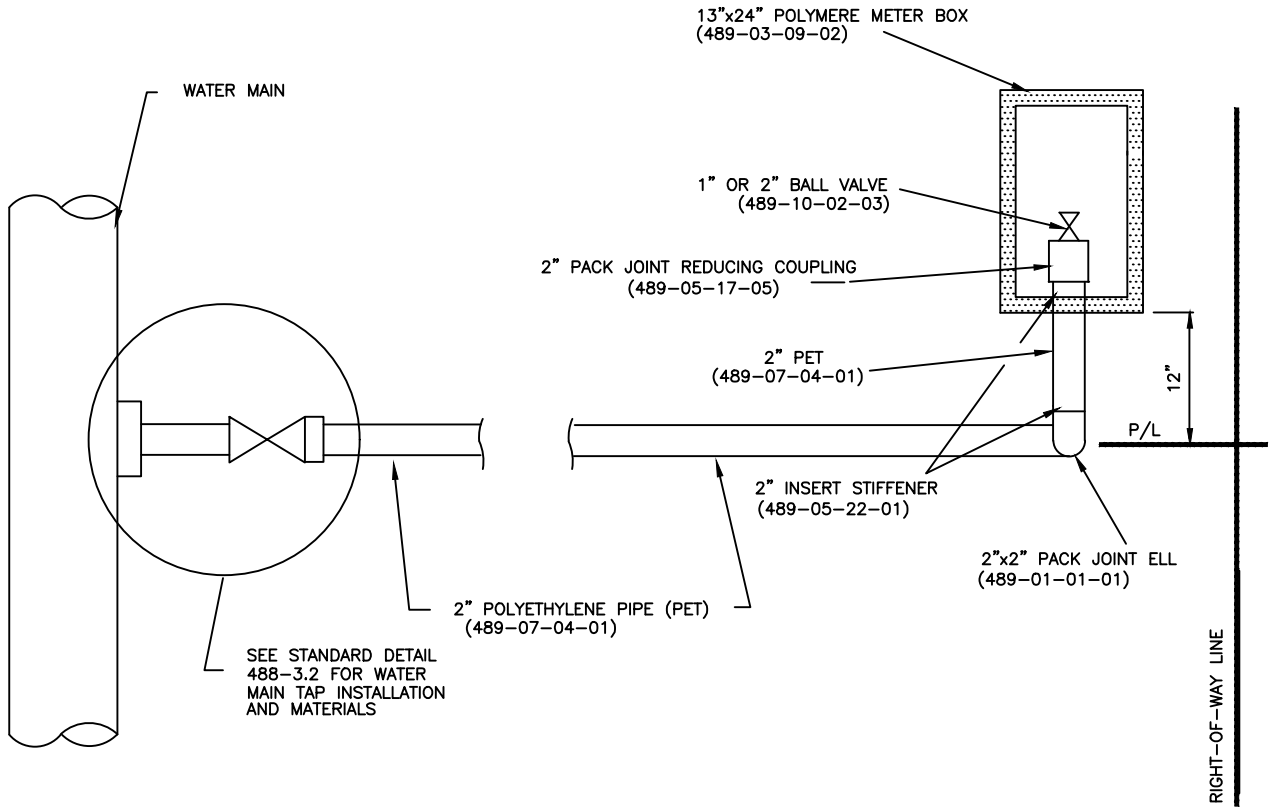

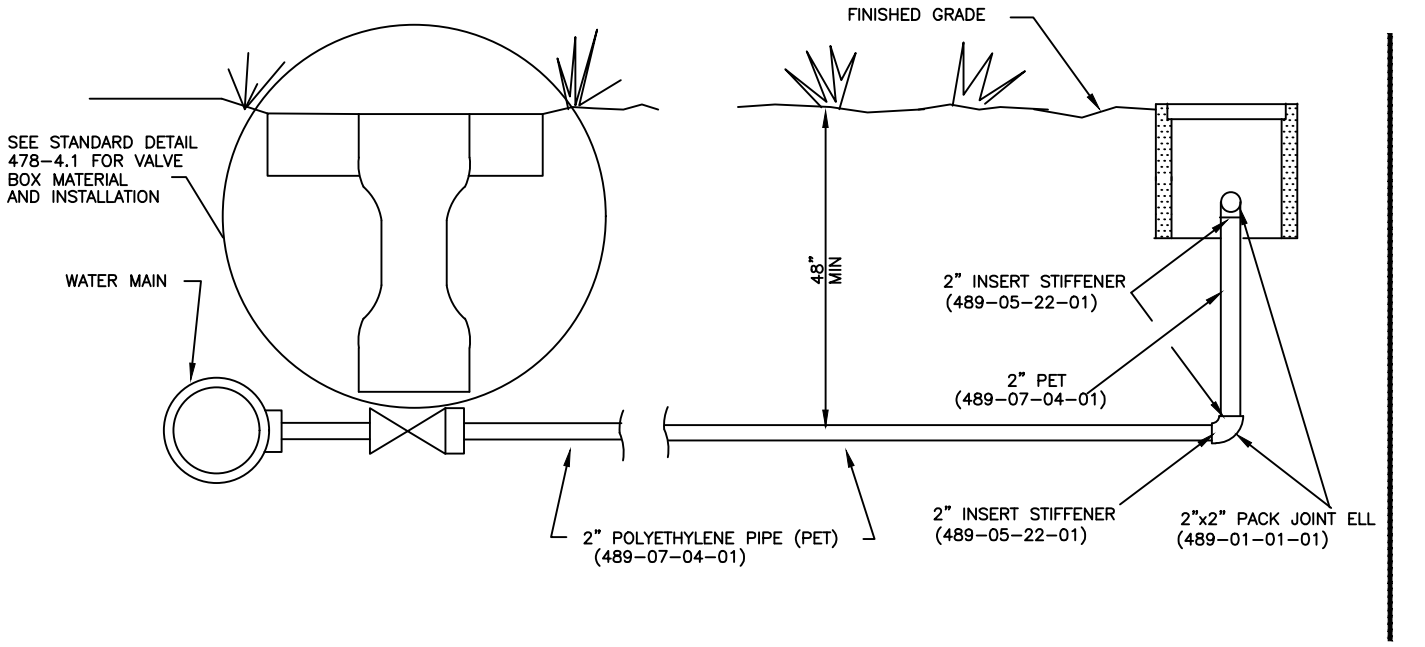

NOTES

1. WATER SERVICE TO BE INSTALLED WITH A SOLID COPPER LOCATING WIRE SEE STANDARD DETAIL 478-7.1 FOR LOCATING WIRE INSTALLATION.
2. LONG SERVICES UNDER PAVEMENT REQUIRE 4" CASING OF PVC, HDPE OR STEEL.

DATE REVISED: *AUGUST 9, 2012*			SECTION 488-2.1
Water & Sewer Department Utilities Division (352) 351-6772	CITY OF OCALA STANDARD DETAIL	WATER SERVICE SINGLE WATER SERVICE COMMERCIAL INSTALLATION	E SHT 1 OF 1

\\sharedept\Clust3\Water_sd-WS-Engineering\Water & Sewer Construction Manual\August 2012\Details\Water-Rev. April 2011\48821e 080912.dwg, 11/8/2016 1:20:45 PM

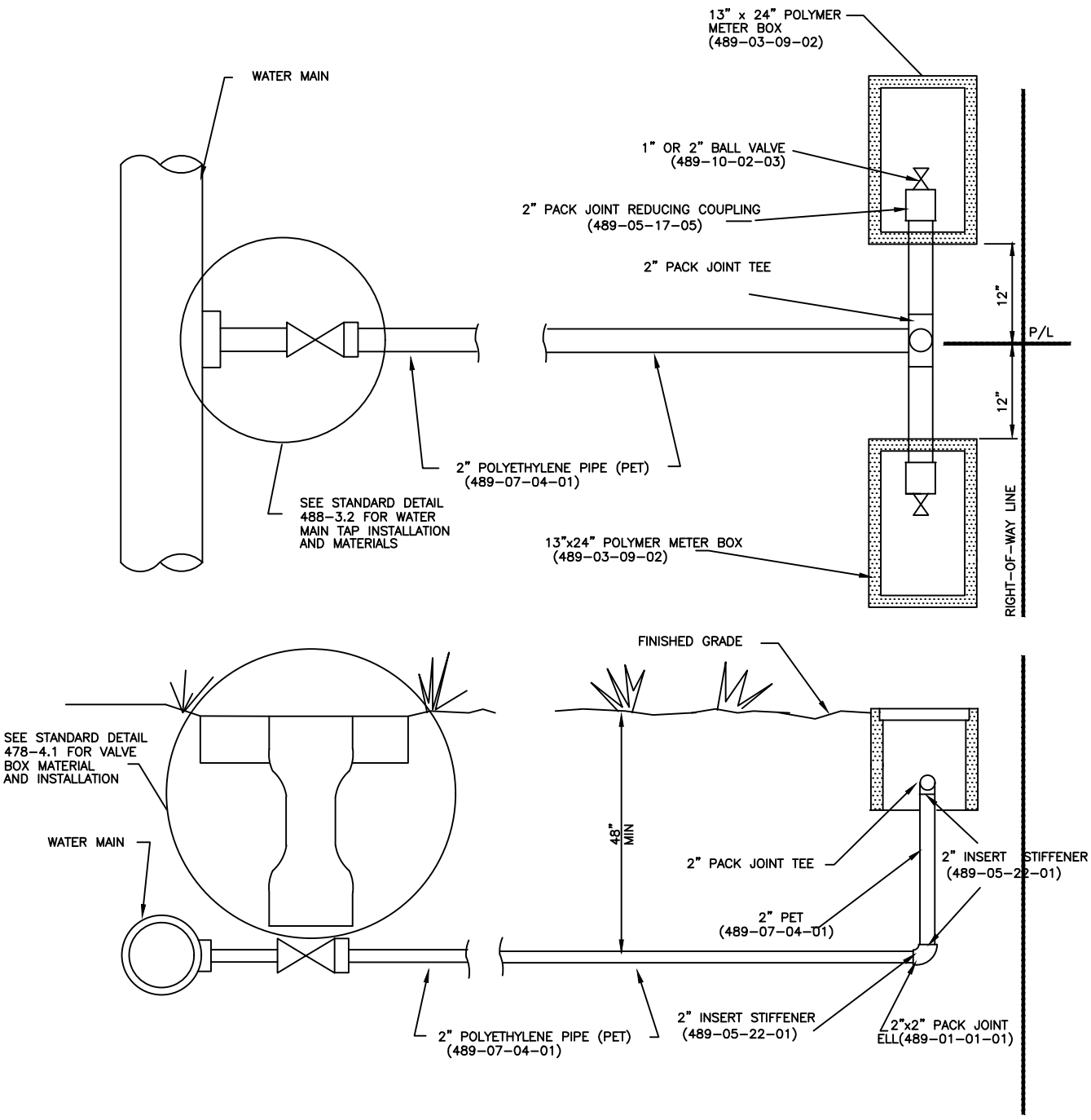

NOTES

1. WATER SERVICE TO BE INSTALLED WITH A SOLID COPPER LOCATING WIRE SEE STANDARD DETAIL 478-7.1 FOR LOCATING WIRE INSTALLATION.
2. LONG SERVICES UNDER PAVEMENT REQUIRE 4" CASING OF PVC, HDPE OR STEEL.

DATE REVISED: *AUGUST 9, 2012*			SECTION 488-2.1
Water & Sewer Department Utilities Division (352) 351-6772	CITY OF OCALA STANDARD DETAIL	WATER SERVICE DOUBLE WATER SERVICE COMMERCIAL INSTALLATION	F SHT 1 OF 1

\\sharedept\Clust3\Water_sd-WS-Engineering\Water & Sewer Construction Manual\August 2012\Details\Water-Rev. April 2011\48821f 080912.dwg, 11/8/2016 1:20:49 PM

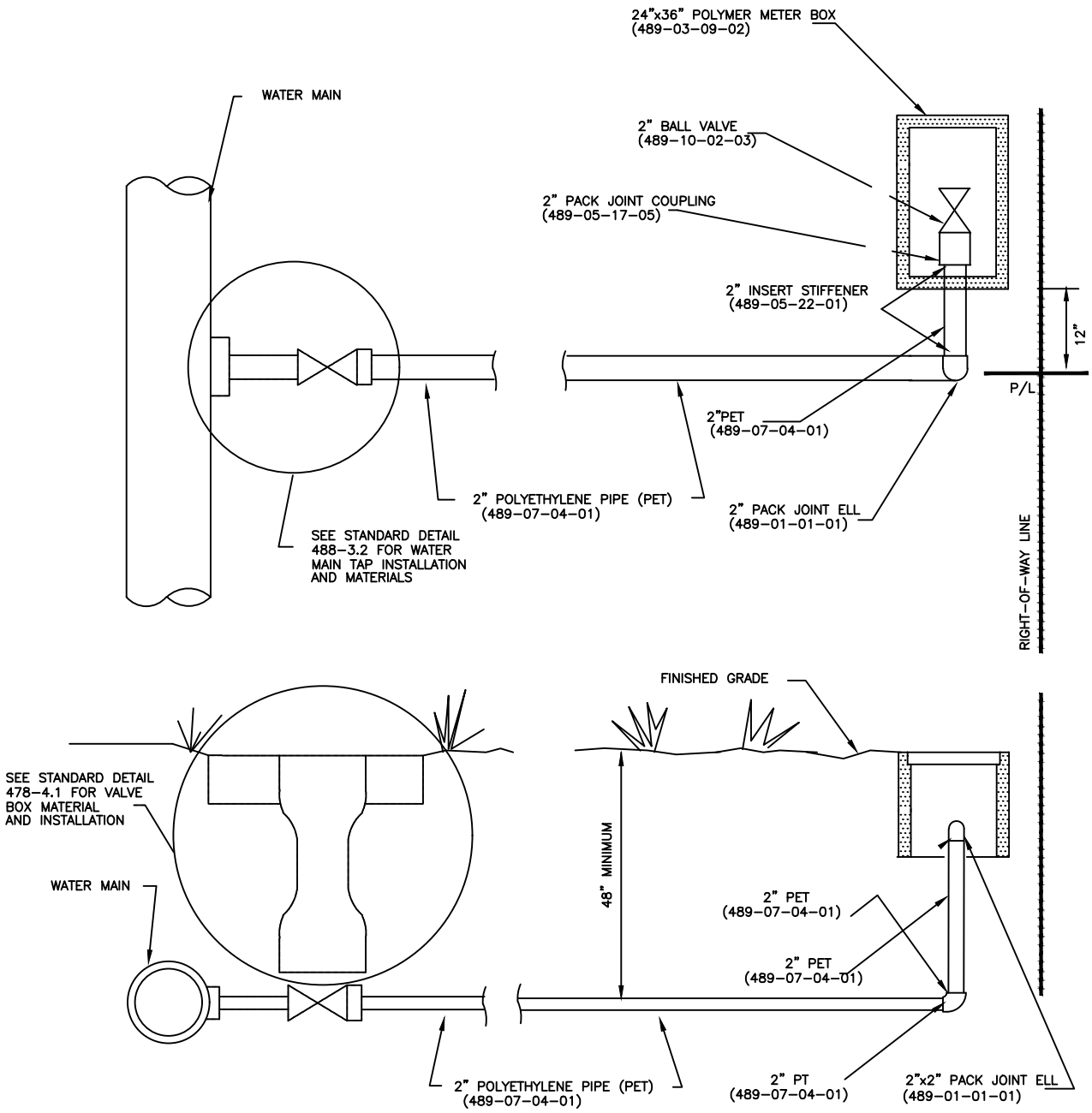

NOTES

1. WATER SERVICE TO BE INSTALLED WITH A SOLID COPPER LOCATING WIRE SEE STANDARD DETAIL 478-7.1 FOR LOCATING WIRE INSTALLATION.
2. LONG SERVICES UNDER PAVEMENT REQUIRE 4" CASING OF PVC, HDPE OR STEEL.

DATE REVISED: *AUGUST 9, 2012*			SECTION 488-2.1
Water & Sewer Department Utilities Division (352) 351-6772	CITY OF OCALA STANDARD DETAIL	WATER SERVICE	G
		SINGLE 1-1/2" & 2" WATER SERVICE	SHT 1 OF 1

\\sharedept\Clust3\Water_sd-WS-Engineering\Water & Sewer Construction Manual\August 2012\Details\Water-Rev. April 2011\48821g 080912.dwg, 11/8/2016 1:20:52 PM

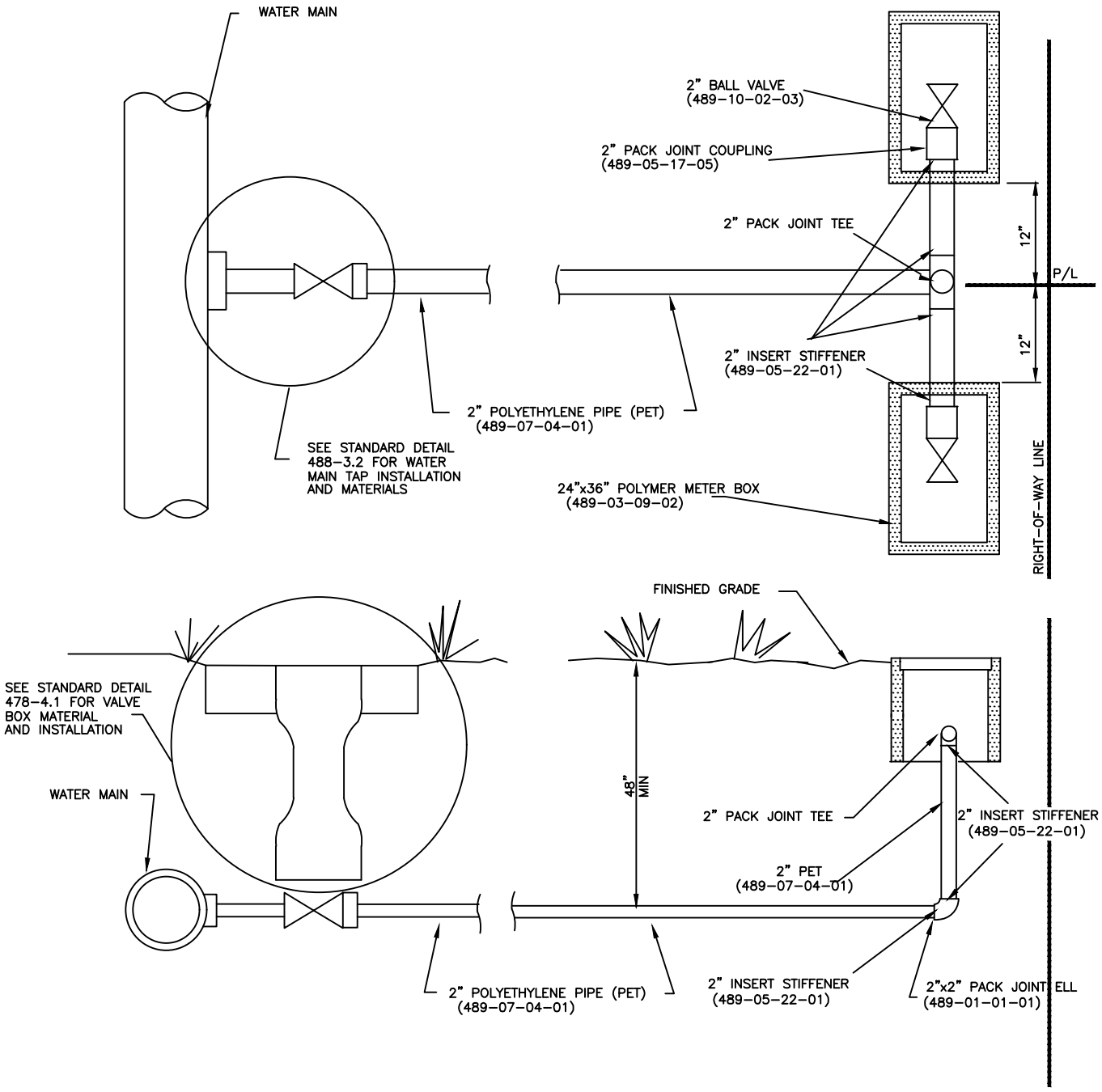

NOTES

1. WATER SERVICE TO BE INSTALLED WITH A SOLID COPPER LOCATING WIRE SEE STANDARD DETAIL 478-7.1 FOR LOCATING WIRE INSTALLATION.
2. LONG SERVICES UNDER PAVEMENT REQUIRE 4" CASING OF PVC, HDPE OR STEEL.

DATE REVISED: *AUGUST 9, 2012*			SECTION 488-2.1
Water & Sewer Department Utilities Division (352) 351-6772	CITY OF OCALA STANDARD DETAIL	WATER SERVICE DOUBLE 1-1/2" & 2" WATER SERVICE	H SHT 1 OF 1

\\sharedept\Clust3\Water_sd-WS-Engineering\Water & Sewer Construction Manual\August 2012\Details\Water-Rev. April 2011\48821h 080912.dwg, 11/8/2016 1:20:55 PM

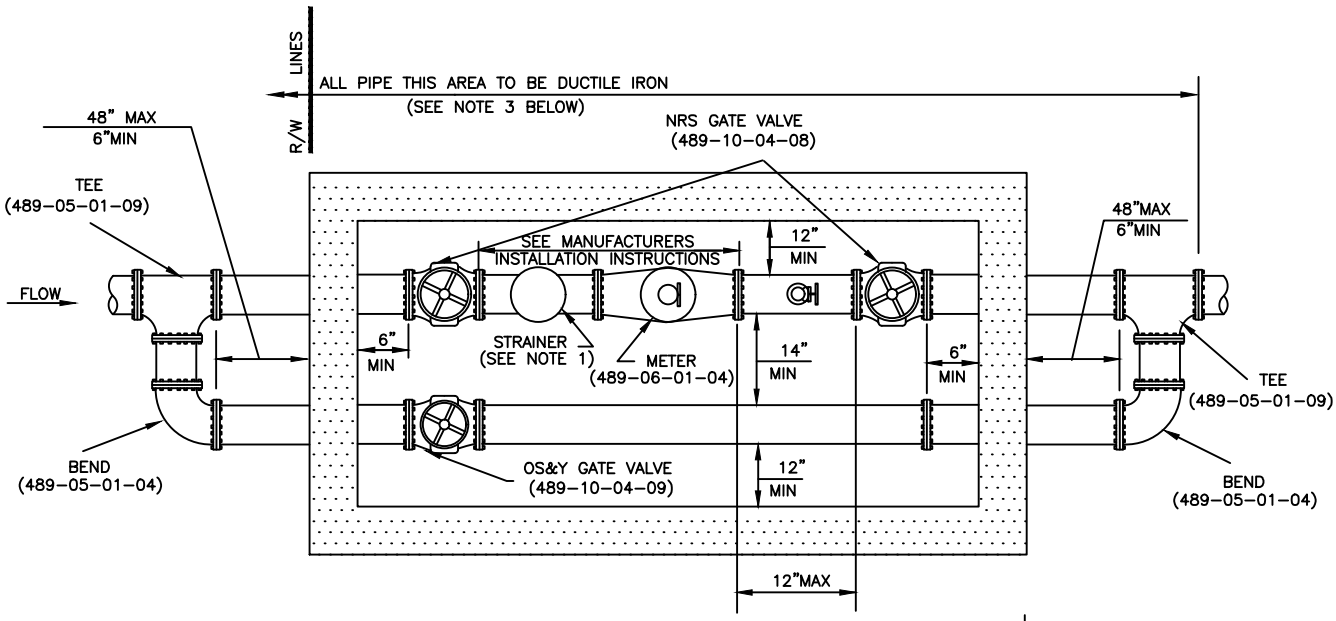

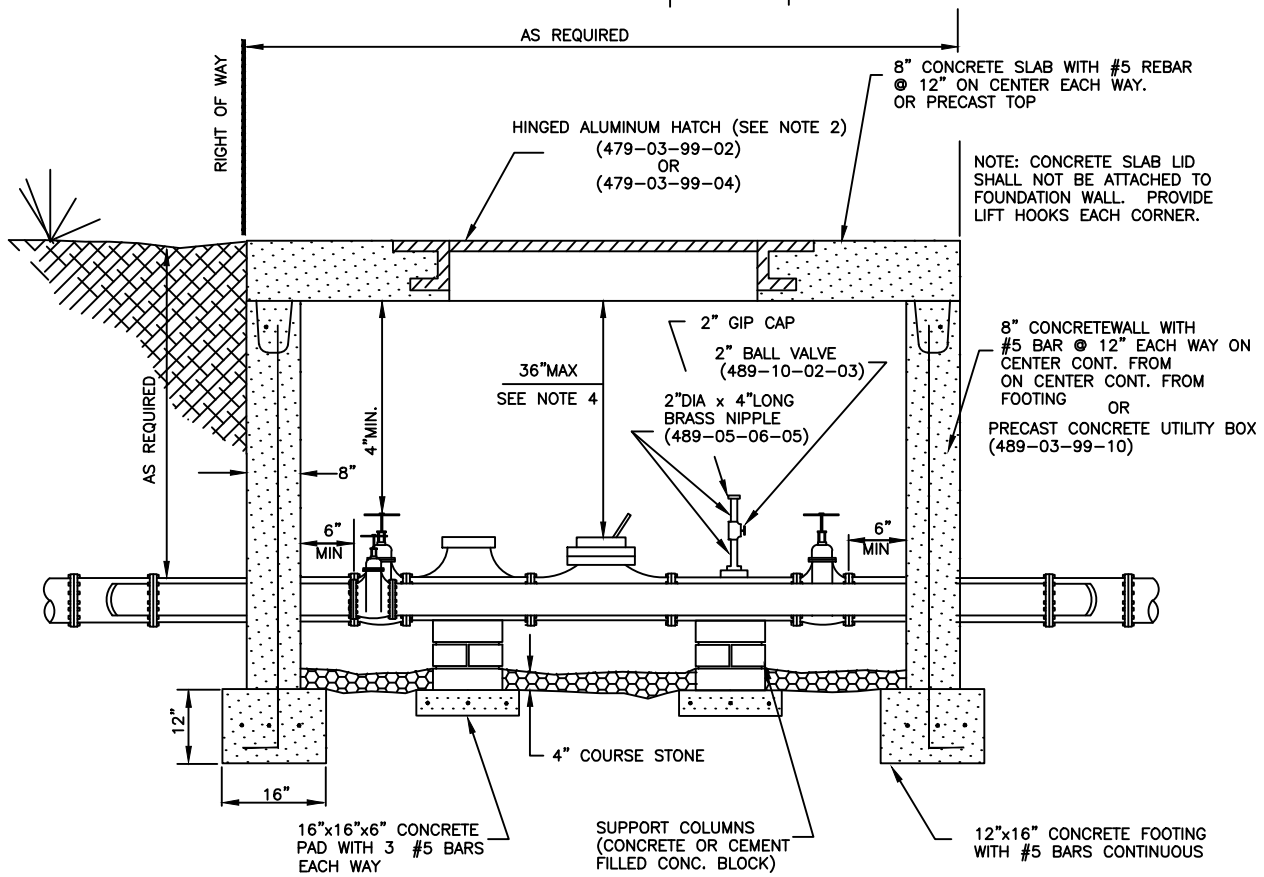

NOTES

1. METERS SHALL BE FURNISHED WITH STRAINERS APPROVED BY THE METER MANUFACTURER AND INSTALLED IN ACCORDANCE WITH THE MANUFACTURERS INSTRUCTIONS.
2. ALUMINUM HATCH SHALL BE 30" X 30" FOR METERS 3" AND 4". HATCH FOR METERS 6" AND ABOVE SHALL BE 42" X 42".
3. UNLESS OTHERWISE NOTED, ALL EXPOSED FITTINGS SHALL BE FLANGED AND ALL BURIED FITTINGS SHALL BE MECHANICAL JOINT.
4. METER INSTALLATION GREATER THAN 36" BELOW TOP OF LID REQUIRES INSTALLATION OF A REMOTE READING DEVICE (489-06-99-10) AS SPECIFIED IN 488-9.1A.

DATE REVISED: *AUGUST 9, 2012*			SECTION 488-2.1
Water & Sewer Department Utilities Division (352) 351-6772	CITY OF OCALA STANDARD DETAIL	COMMERCIAL WATER SERVICE 3" AND ABOVE WITH TRAFFIC LID	I SHT 1 OF 1

\\sharedept\Clust3\Water_sd-WS-Engineering\Water & Sewer Construction Manual\August 2012\Details\Water-Rev. April 2011\48821I 080912.dwg, 11/8/2016 1:20:58 PM

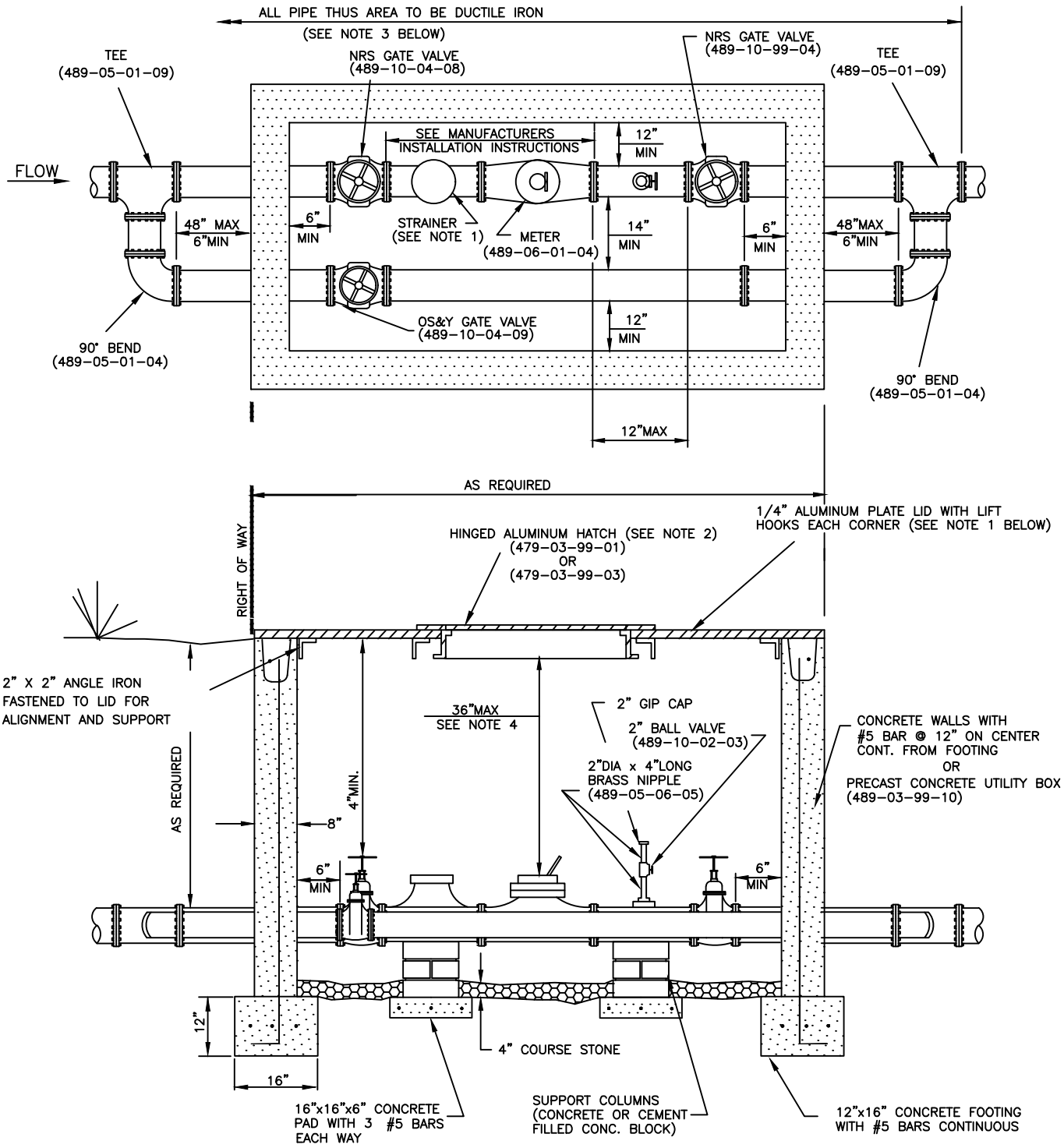

NOTES

1. METERS SHALL BE FURNISHED WITH STRAINERS APPROVED BY THE METER MANUFACTURER AND INSTALLED IN ACCORDANCE WITH THE MANUFACTURERS INSTRUCTIONS.
2. ALUMINUM HATCH SHALL BE 30" X 30" FOR METERS 3" AND 4". HATCH FOR METERS 6" AND ABOVE SHALL BE 42" X 42".
3. UNLESS OTHERWISE NOTED, ALL EXPOSED FITTINGS SHALL BE FLANGED AND ALL BURIED FITTINGS SHALL BE MECHANICAL JOINT.
4. METER INSTALLATION GREATER THAN 36" BELOW TOP OF LID REQUIRES INSTALLATION OF A REMOTE READING DEVICE (498-06-99-10) AS SPECIFIED IN 488-9.1A.

DATE REVISED: *AUGUST 9, 2012*			SECTION 488-2.1
Water & Sewer Department Utilities Division (352) 351-6772	CITY OF OCALA STANDARD DETAIL	COMMERCIAL WATER SERVICE 3" AND ABOVE NON-TRAFFIC LID	J SHT 1 OF 1

\\sharedept\Clust3\Water_sd-WS-Engineering\Water & Sewer Construction Manual\August 2012\Details\Water-Rev. April 2011\48821J 080912.dwg, 11/8/2016 1:21:03 PM

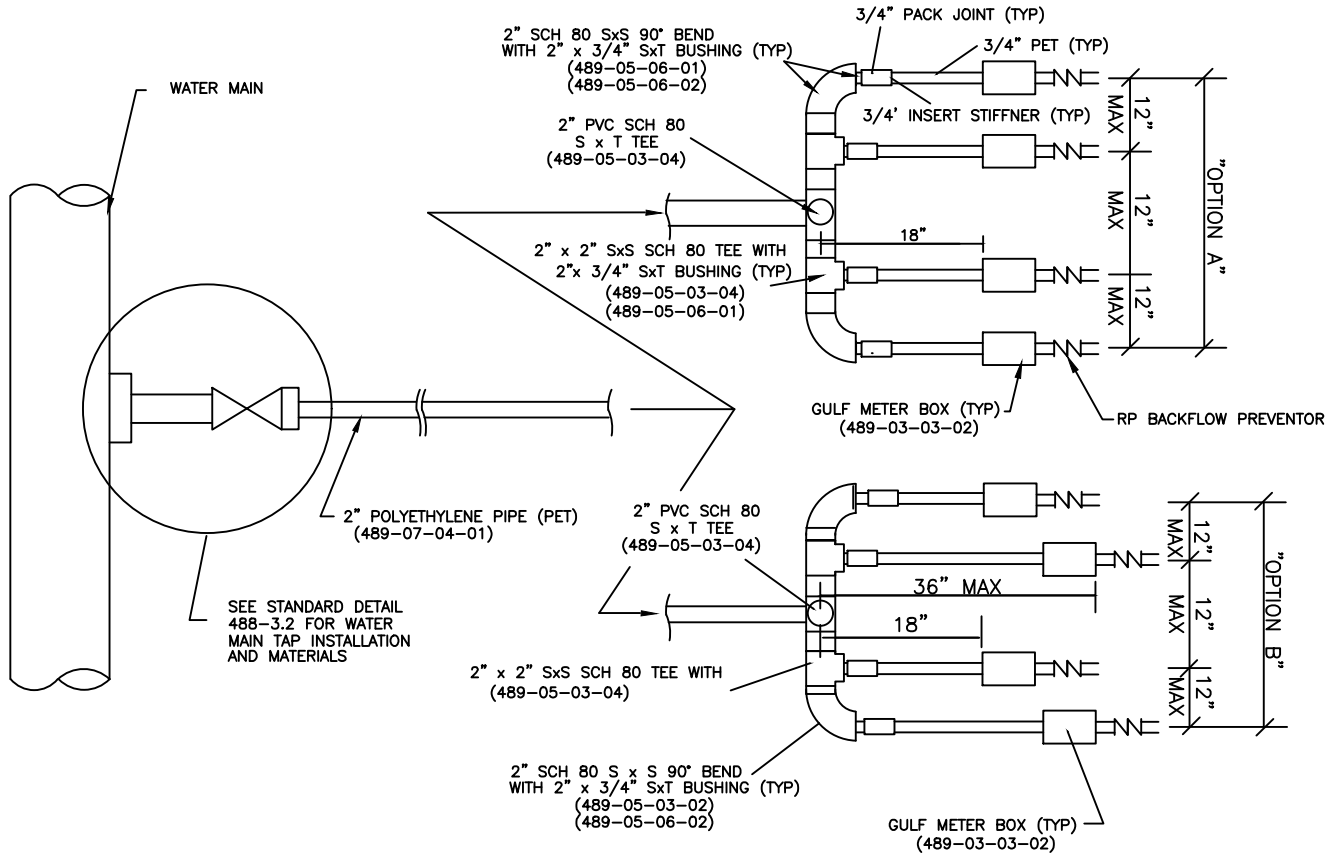

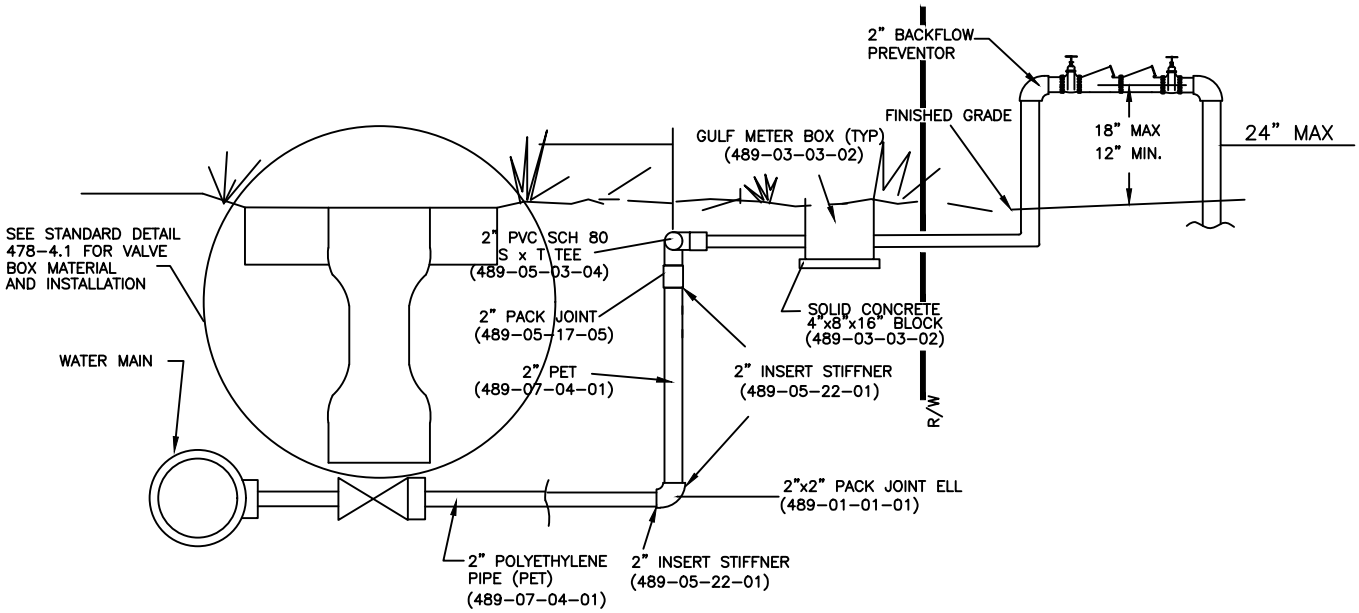

NOTES

1. WATER SERVICE TO BE INSTALLED WITH A SOLID COPPER LOCATING WIRE SEE STANDARD DETAIL 478-7.1 FOR LOCATING WIRE INSTALLATION.
2. MAXIMUM NUMBER OF METERS ON ONE TWO INCH (2") SERVICE TO BE FOUR (4).
3. LONG SERVICES UNDER PAVEMENT REQUIRE 4" CASING OF PVC, HDPE OR STEEL.
4. ABOVE GROUND PIPING MUST BE INSULATED FOR FREEZE PROTECTION.

DATE REVISED: *MARCH 4, 2009*			SECTION 488-2.1
Water & Sewer Department Utilities Division (352) 351-6772	CITY OF OCALA STANDARD DETAIL	WATER SERVICE	K
		MULTI-FAMILY SERVICE INSTALLATION	SHT 1 OF 1

\\sharedept\Clust3\Water_sd-WS-Engineering\Water & Sewer Construction Manual\August 2012\Details\Water-Rev. April 2011\48821k 020513.dwg, 11/8/2016 1:21:07 PM

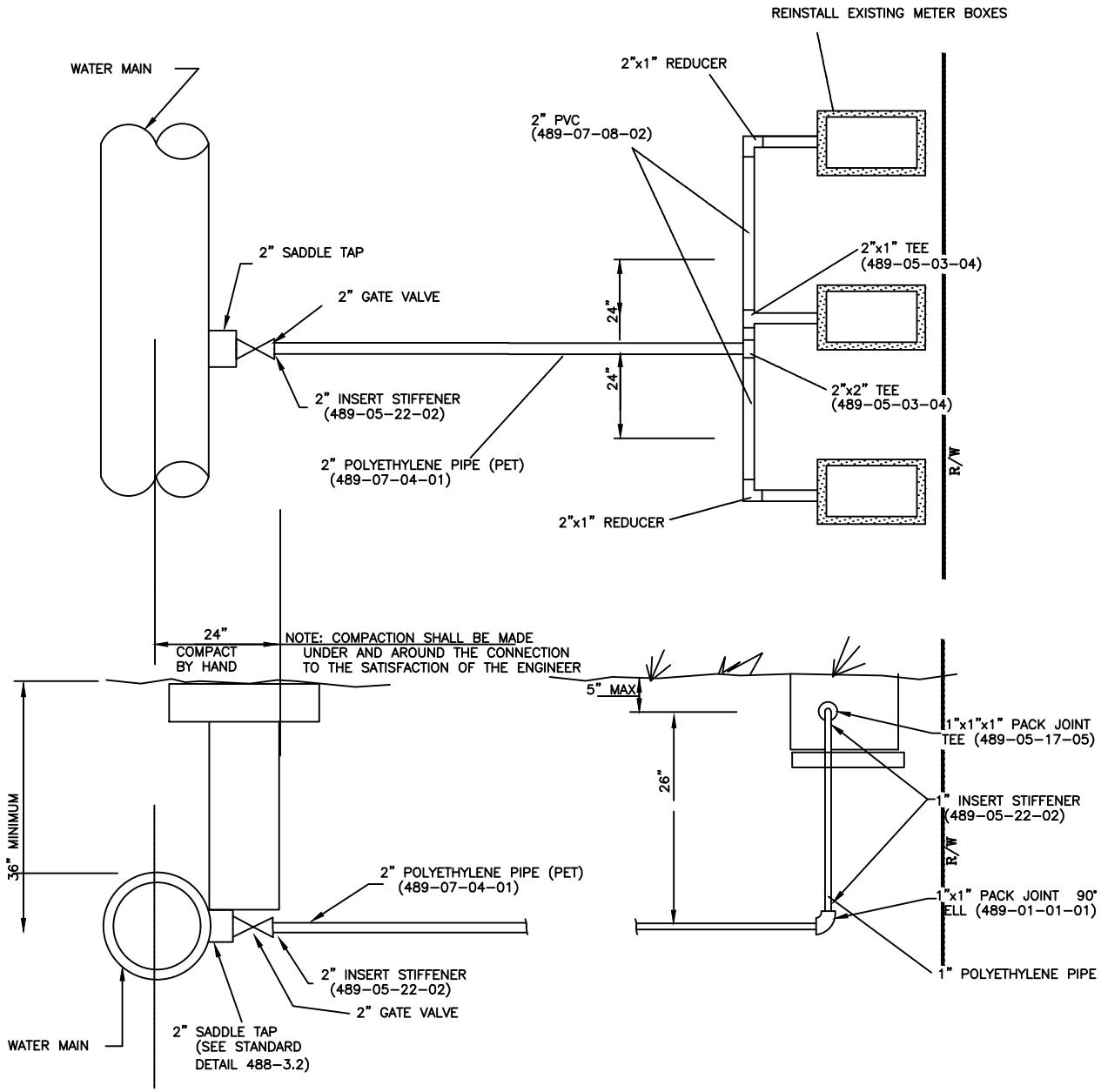

NOTES

1. WATER SERVICE TO BE INSTALLED WITH SOLID COPPER LOCATING WIRE. SEE STANDARD DETAIL 478-7.1 FOR LOCATING WIRE INSTALLATION.
2. LONG SERVICES UNDER PAVEMENT REQUIRE 4" CASING OF PVC, HDPE OR STEEL.

DATE REVISED: *DECEMBER 18, 2012*			SECTION 488-2.1
Water & Sewer Department Utilities Division (352) 351-6772	CITY OF OCALA STANDARD DETAIL	WATER SERVICE	L
		TRIPLE 1" WATER SERVICE INSTALLATION	SHT 1 OF 1

\\sharedept\Clust3\Water_sd-WS-Engineering\Water & Sewer Construction Manual\August 2012\Details\Water-Rev. April 2011\48821l 121812.dwg, 11/8/2016 1:21:10 PM

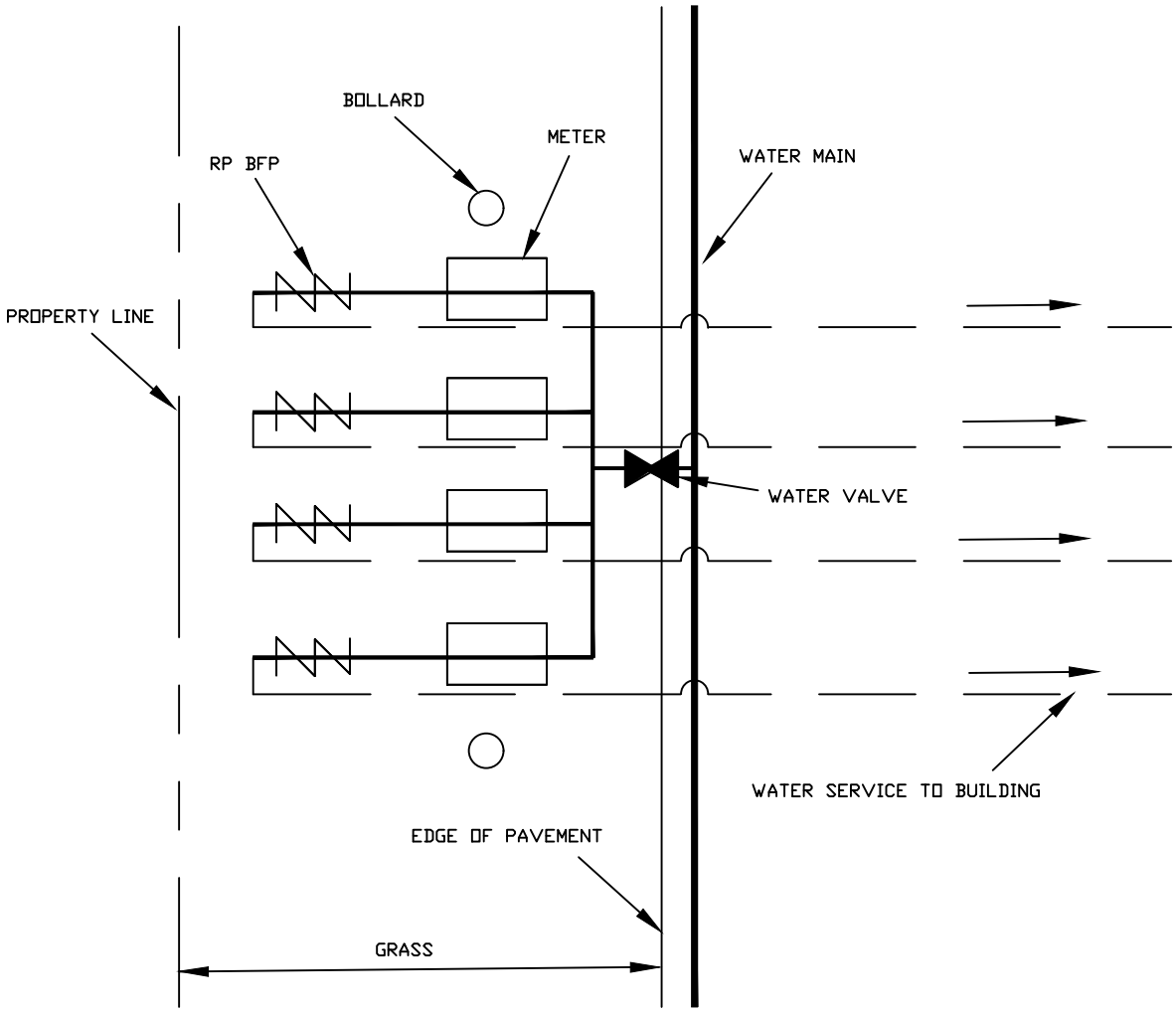

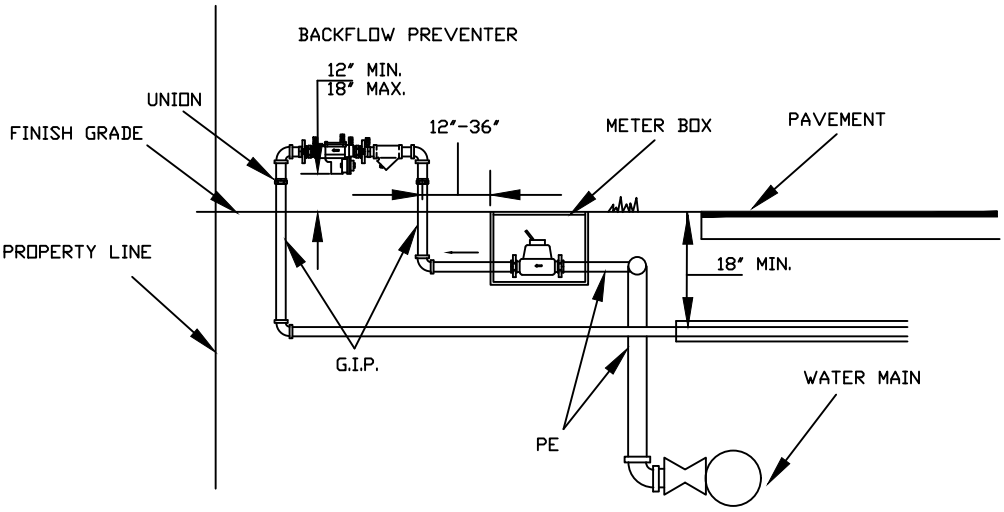

NOTES

1. WATER SERVICE TO BE INSTALLED WITH A SOLID COPPER LOCATING WIRE. SEE DETAIL 478-7.1.
2. MAXIMUM NUMBER OF METERS ON ONE TWO INCH (2") SERVICE TO BE FOUR (4).
3. LONG SERVICES UNDER PAVEMENT REQUIRE 4" CASING OF PVC, HDPE OR STEEL.
4. ABOVE GROUND PIPING MUST BE INSULATED FOR FREEZE PROTECTION.

DATE REVISED: *DECEMBER 18, 2012*			SECTION 488-2.1
Water & Sewer Department Utilities Division (352) 351-6772	CITY OF OCALA STANDARD DETAIL	COMMERCIAL WATER SERVICES IN DRIVEWAY/PARKING AREAS	M SHT 1 OF 1

\\sharedept\Clust3\Water_sd-WS-Engineering\Water & Sewer Construction Manual\August 2012\Details\Water-Rev. April 2011\48821M 121812.dwg, 11/8/2016 1:21:13 PM

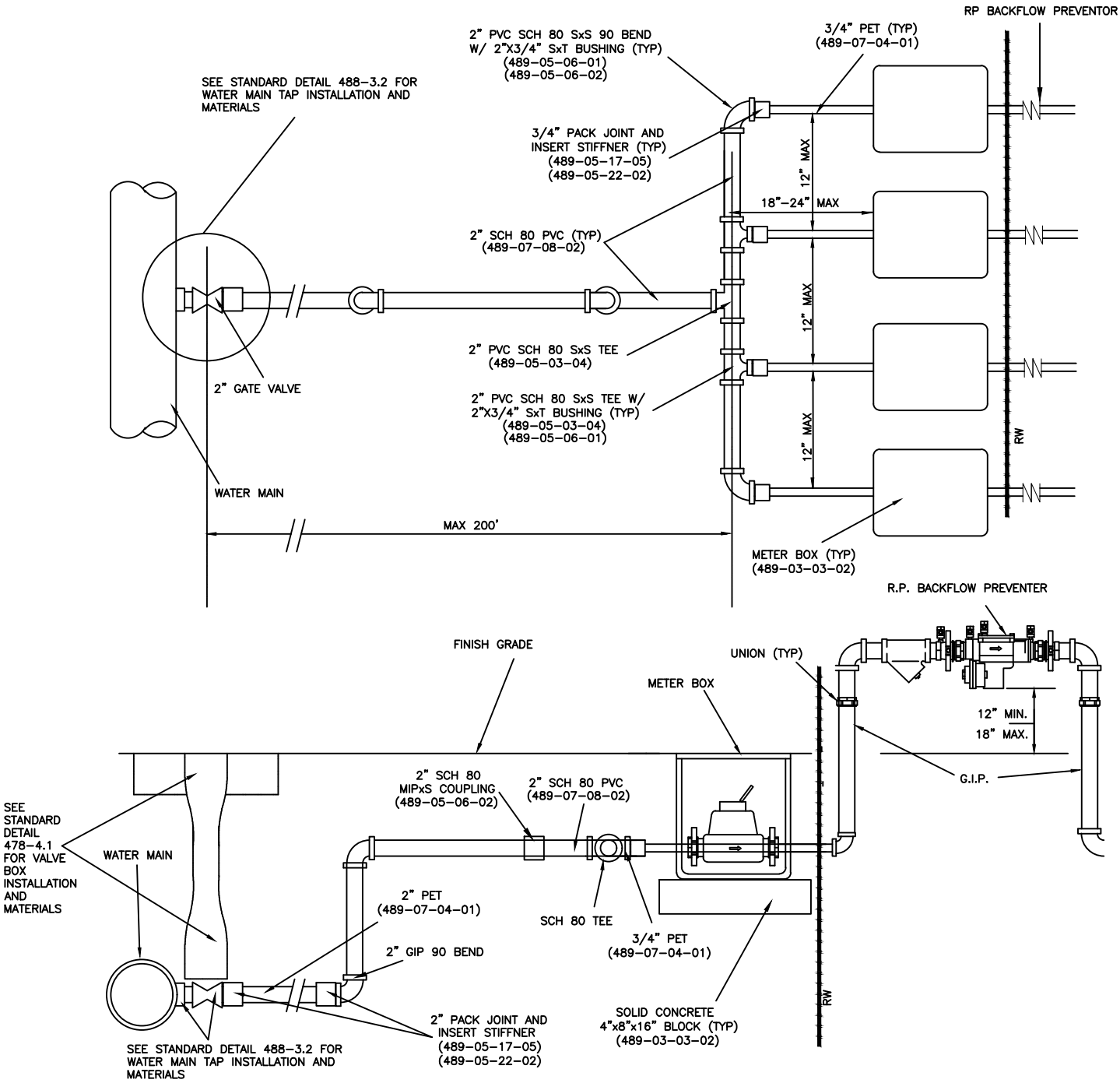

MULTIPLE METER SERVICE INSTALLATION

1. INSULATE ALL ABOVE GROUND PIPING FOR FREEZE PROTECTION.
2. INSTALL BOLALRDS FOR PROTECTION IN TRAFFIC AREAS.
3. WATER SERVICE TO BE INSTALLED WITH A SOLID COPPER LOCATING WIRE. SEE DETAIL 478-1.

DATE REVISED: *FEBRUARY 17, 2009*			SECTION 488-2.1
Water & Sewer Department Utilities Division (352) 351-6772	CITY OF OCALA STANDARD DETAIL	WATER SERVICE COMMERCIAL MULTIPLE 3/4" WATER SERVICE INSTALLATION	N SHT 1 OF 1

\\sharedept\Clust3\Water_sd-WS-Engineering\Water & Sewer Construction Manual\August 2012\Details\Water-Rev. April 2011\48821N 020513.dwg, 11/8/2016 1:21:17 PM

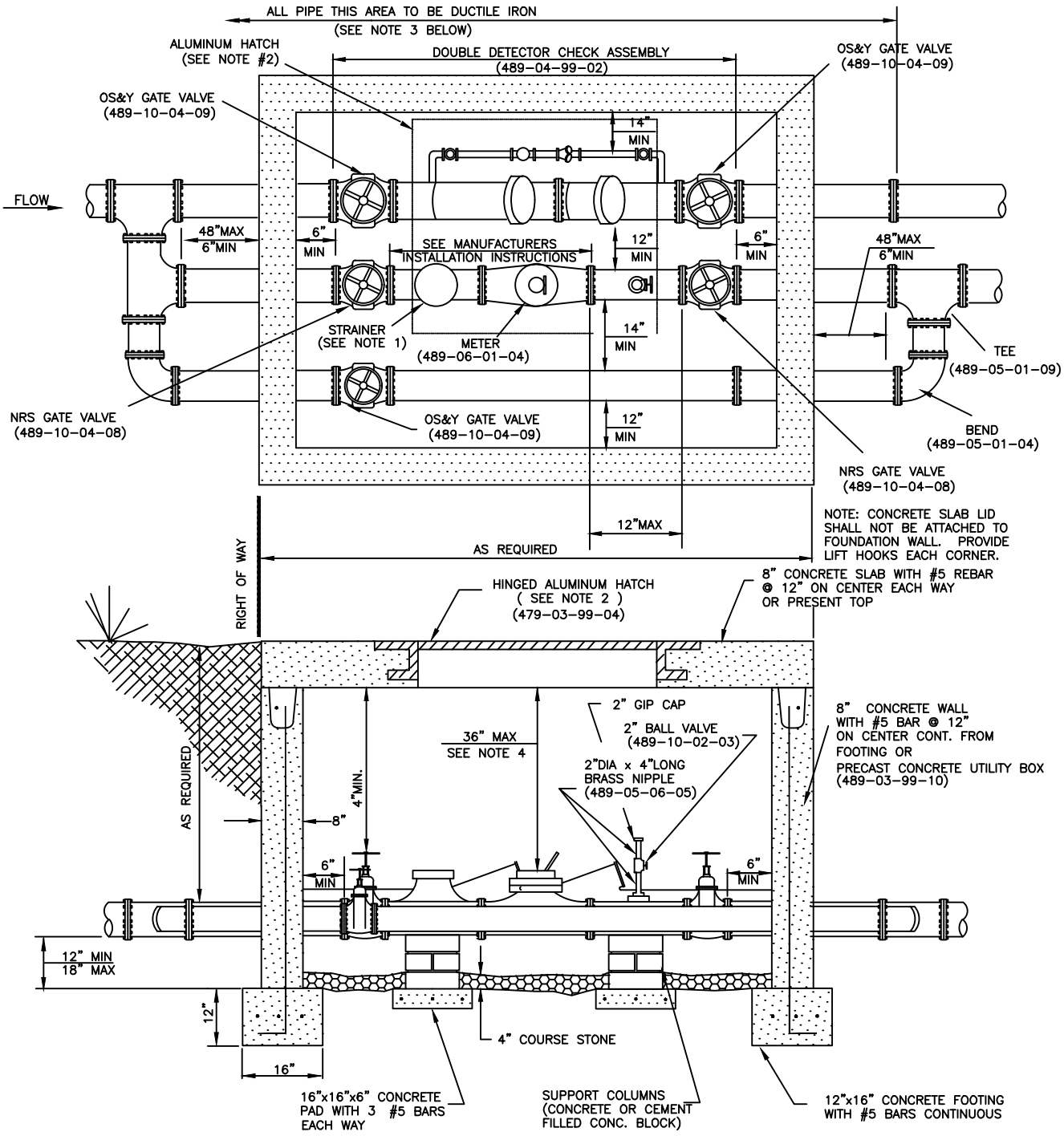

NOTES

1. METERS SHALL BE FURNISHED WITH STRAINERS APPROVED BY THE METER MANUFACTURER AND INSTALLED IN ACCORDANCE WITH THE MANUFACTURERS INSTRUCTIONS.
2. ALUMINUM HATCH TO BE SIZED TO PROVIDE MINIMUM OF 4" CLEARANCE ON ALL SIDES FOR REMOVAL OF EQUIPMENT.
3. UNLESS OTHERWISE NOTED, ALL EXPOSED FITTINGS SHALL BE FLANGED AND ALL BURIED FITTINGS SHALL BE MECHANICAL JOINT.
4. METER INSTALLATION GREATER THAN 36" BELOW TOP OF LID REQUIRES INSTALLATION OF A REMOTE READING DEVICE (489-06-99-10) AS SPECIFIED IN 488-9.1A.

DATE REVISED: *AUGUST 9, 2012*			SECTION 488-2.2
Water & Sewer Department Utilities Division (352) 351-6772	CITY OF OCALA STANDARD DETAIL	WATER/FIRE SERVICE 3" AND ABOVE WITH TRAFFIC LID	A SHT 1 OF 1

\\sharedept\Clust3\Water_sd-WS-Engineering\Water & Sewer Construction Manual\August 2012\Details\Water-Rev. April 2011\48822A 080912.dwg, 11/8/2016 1:21:21 PM

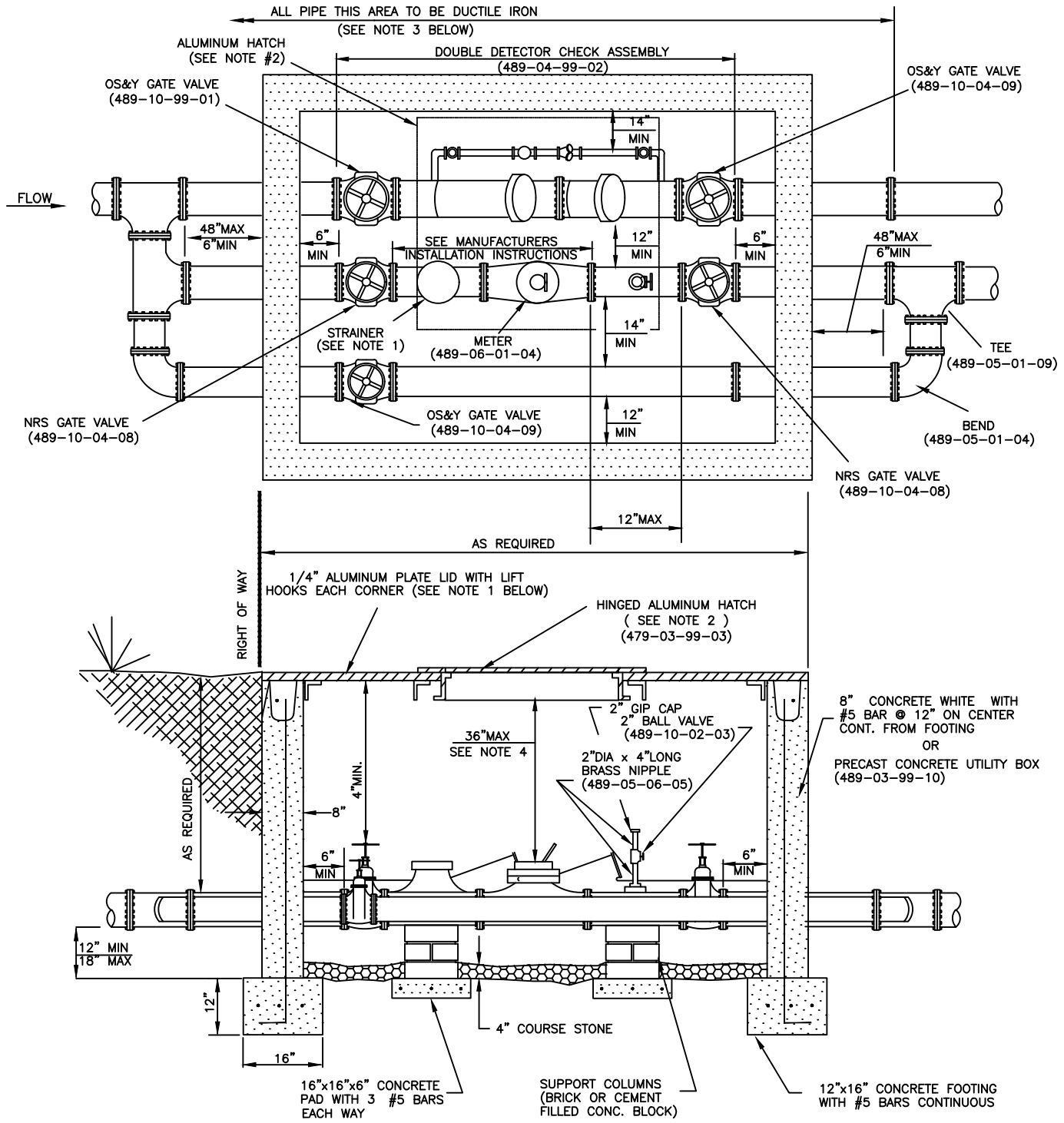

NOTES

1. METERS SHALL BE FURNISHED WITH STRAINERS APPROVED BY THE METER MANUFACTURER AND INSTALLED IN ACCORDANCE WITH THE MANUFACTURERS INSTRUCTIONS.
2. ALUMINUM HATCH TO BE SIZED TO PROVIDE MINIMUM OF 4" CLEARANCE FOR ALL EQUIPMENT.
3. UNLESS OTHERWISE NOTED, ALL EXPOSED FITTINGS SHALL BE FLANGED AND ALL BURIED FITTINGS SHALL BE MECHANICAL JOINT.
4. METER INSTALLATION GREATER THAN 36" BELOW TOP OF LID REQUIRES INSTALLATION OF A REMOTE READING DEVICE (489-06-99-10) AS SPECIFIED IN 488-9.1A.

DATE REVISED: *AUGUST 9, 2012*			SECTION 488-2.2
Water & Sewer Department Utilities Division (352) 351-6772	CITY OF OCALA STANDARD DETAIL	WATER/FIRE SERVICE 3" AND ABOVE WITH NON-TRAFFIC LID	B SHT 1 OF 1

\\sharedept\Clust3\Water_sd-WS-Engineering\Water & Sewer Construction Manual\August 2012\Details\Water-Rev. April 2011\48822B 080912.dwg, 11/8/2016 1:21:25 PM

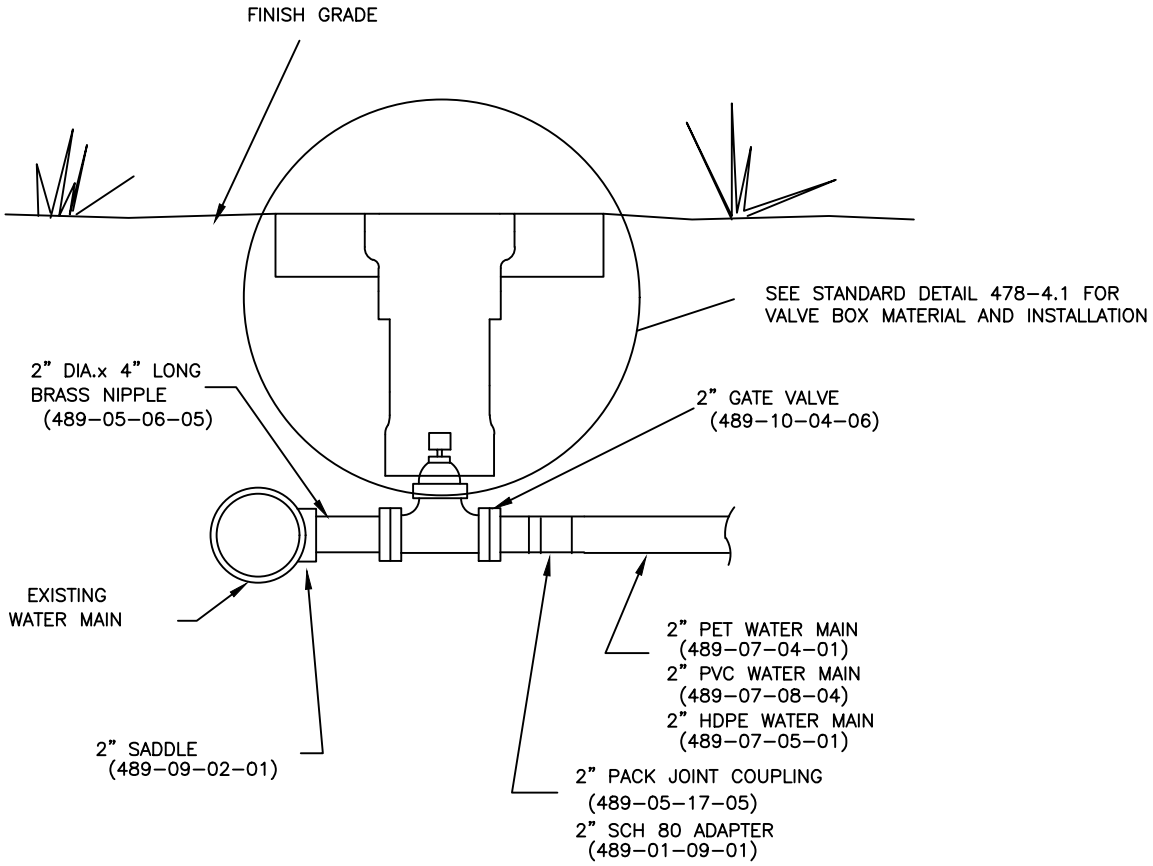

NOTES

1. PRESSURE TEST ALL SADDLES AND VALVES PRIOR TO TAPPING.
2. PRESSURE TEST AT 150 PSI, 10-15 MINUTES

DATE REVISED: *DECEMBER 18, 2012*			SECTION 488-3.2
Water & Sewer Department Utilities Division (352) 351-6772	CITY OF OCALA STANDARD DETAIL	WATER MAIN TAP 2" PVC/PET TO EXISTING MAIN	A SHT 1 OF 1

\\sharedept\Clust3\Water_sd-WS-Engineering\Water & Sewer Construction Manual\August 2012\Details\Water-Rev. April 2011\48832A 121812.dwg, 11/8/2016 1:21:30 PM

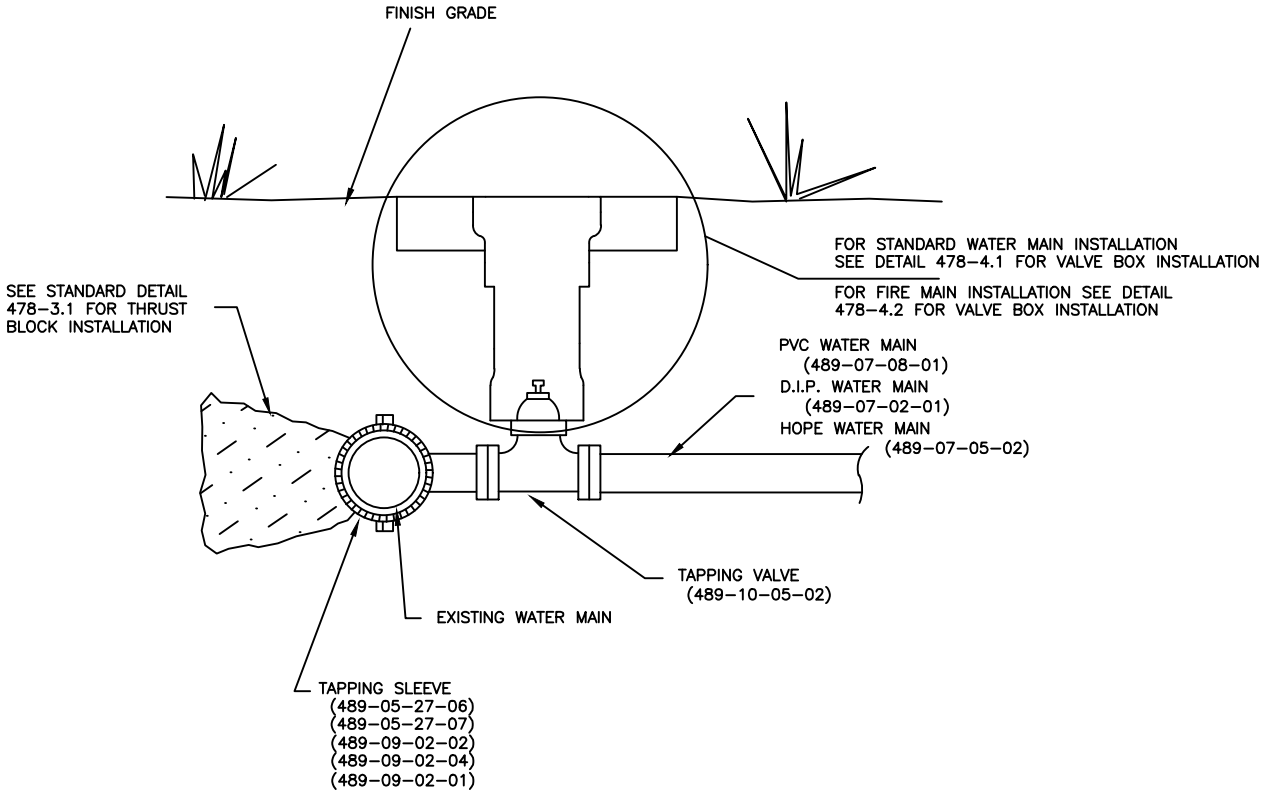

NOTES

1. PRESSURE TEST ALL SADDLES AND VALVES PRIOR TO WET TAP
2. PRESSURE TEST AT 150 PSI, 10–15 MINUTES.

DATE REVISED: *AUGUST 9, 2012*			SECTION 488–3.2
Water & Sewer Department Utilities Division (352) 351–6772	CITY OF OCALA STANDARD DETAIL	WATER MAIN TAP 3" AND ABOVE	B SHT 1 OF 1

\\sharedept\Clust3\Water_sd-WS-Engineering\Water & Sewer Construction Manual\August 2012\Details\Water-Rev. April 2011\48832B 080912.dwg, 11/8/2016 1:21:35 PM

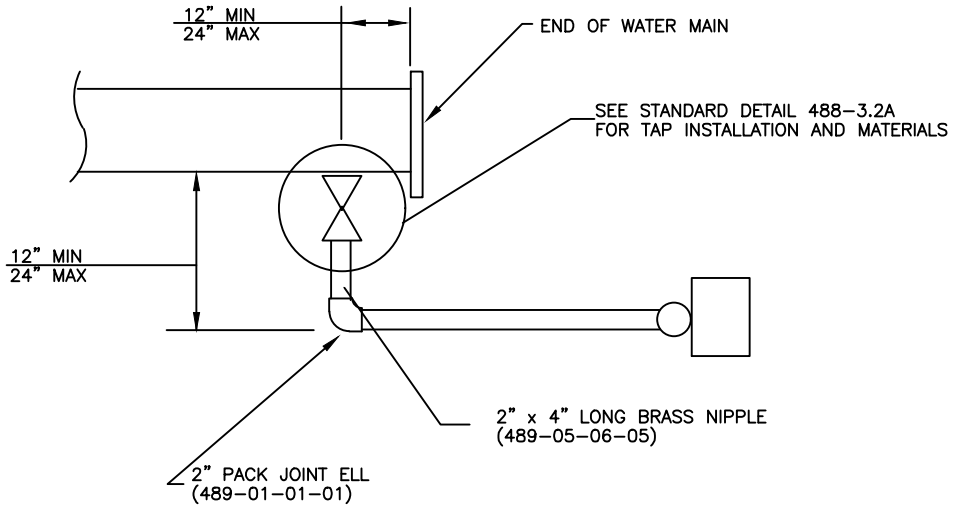

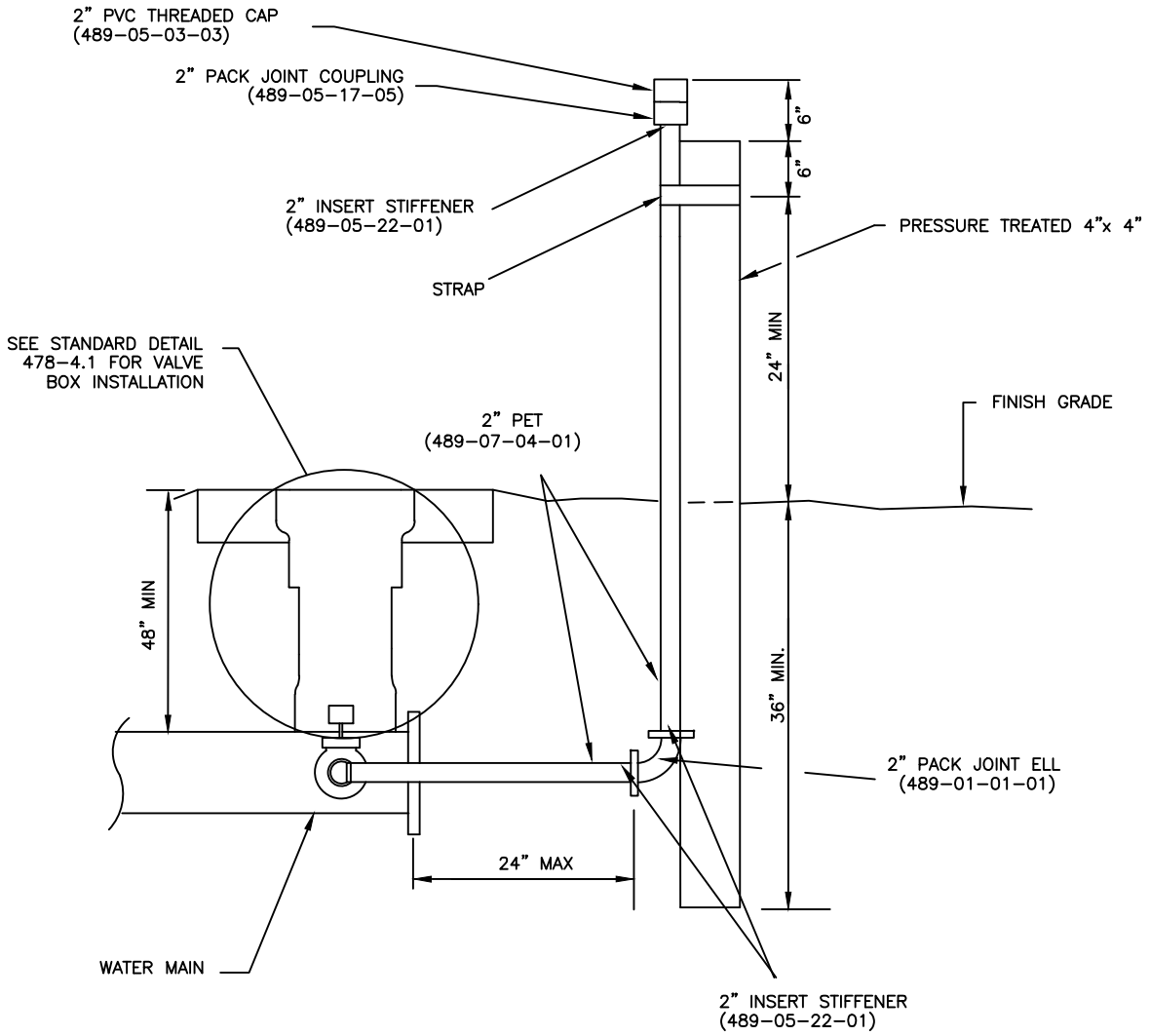

DATE REVISED: *AUGUST 9, 2012*			SECTION 488-3.3
Water & Sewer Department Utilities Division (352) 351-6772	CITY OF OCALA STANDARD DETAIL	TEMPORARY BLOWOFF ASSEMBLY	A SHT 1 OF 1

\\sharedept\Clust3\Water_sd-WS-Engineering\Water & Sewer Construction Manual\August 2012\Details\Water-Rev. April 2011\48833A 080912.dwg, 11/8/2016 1:21:41 PM

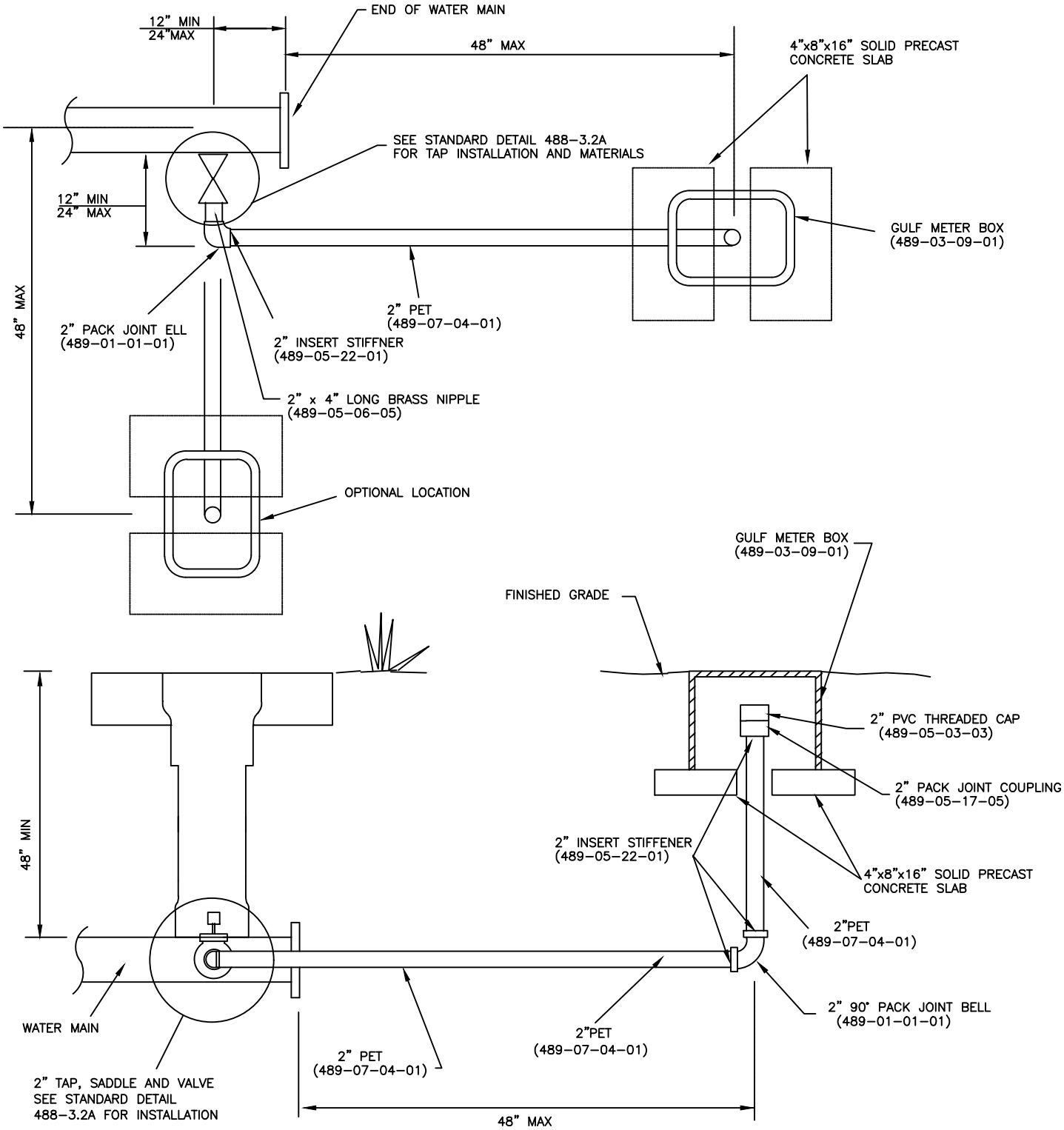

DATE REVISED: *AUGUST 9, 2012*			SECTION 488-3.3
Water & Sewer Department Utilities Division (352) 351-6772	CITY OF OCALA STANDARD DETAIL	2" BLOWOFF ASSEMBLY	B SHT 1 OF 1

\\sharedept\Clust3\Water_sd-WS-Engineering\Water & Sewer Construction Manual\August 2012\Details\Water-Rev. April 2011\48833B 080912.dwg, 11/8/2016 1:21:46 PM

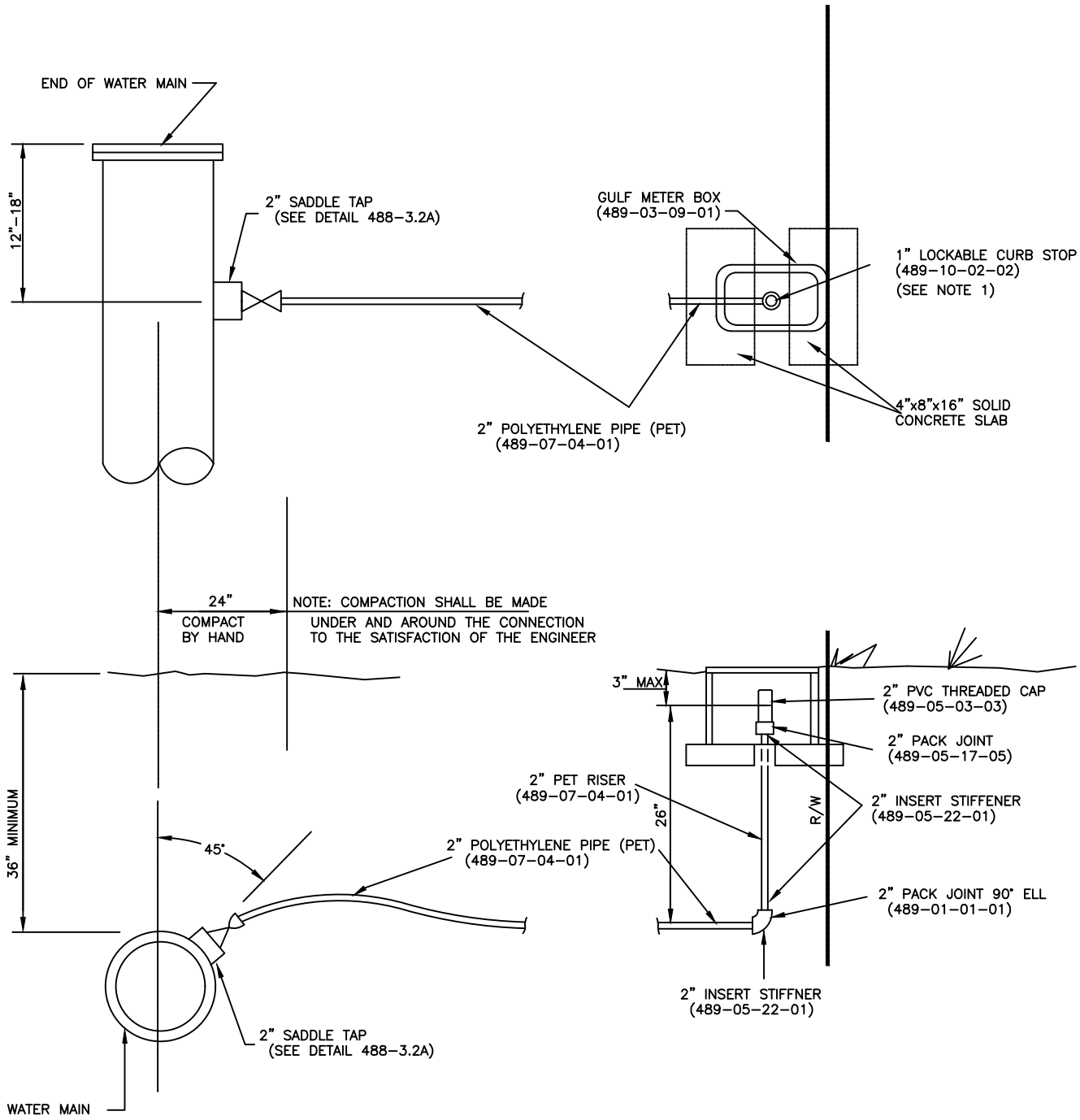

NOTES

1. CURB STOP TO BE FURNISHED WITH LOCKING DEVICE.
2. POLYETHYLENE PIPE TO BE INSTALLED WITH SINGLE SOLID COPPER LOCATING WIRE.
3. ON NEW 2" PVC WATER MAINS, 2" POLYETHYLENE PIPE AND 2" THREADED CAP SHALL BE USED WHEN INSTALLING BLOWOFF ASSEMBLY.
4. ON NEW OR EXISTING WATER MAINS WITH A DIAMETER LARGER THAN 2", A 2" TAP SHALL BE MADE INTO THE MAIN AND A 2" TAPPING VALVE SHALL BE USED WHEN INSTALLING BLOWOFF ASSEMBLY.

DATE REVISED: *DECEMBER 18, 2012*			SECTION 488–3.3
Water & Sewer Department Utilities Division (352) 351–6772	CITY OF OCALA STANDARD DETAIL	CONSTRUCTION BLOWOFF ASSEMBLY	C SHT 1 OF 1

\\sharedept\Clust3\Water_sd-WS-Engineering\Water & Sewer Construction Manual\August 2012\Details\Water-Rev. April 2011\48833C 121812.dwg, 11/8/2016 1:21:49 PM

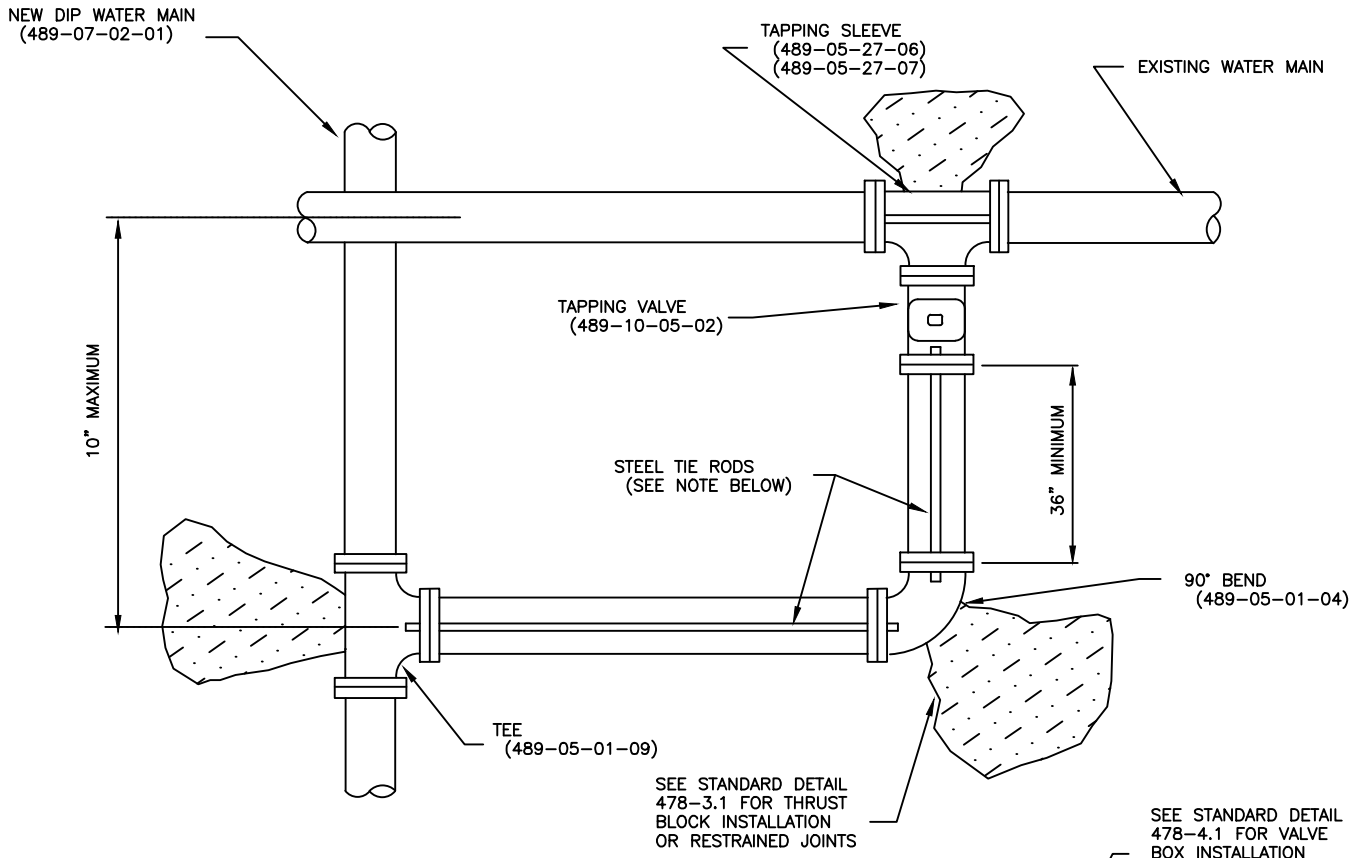

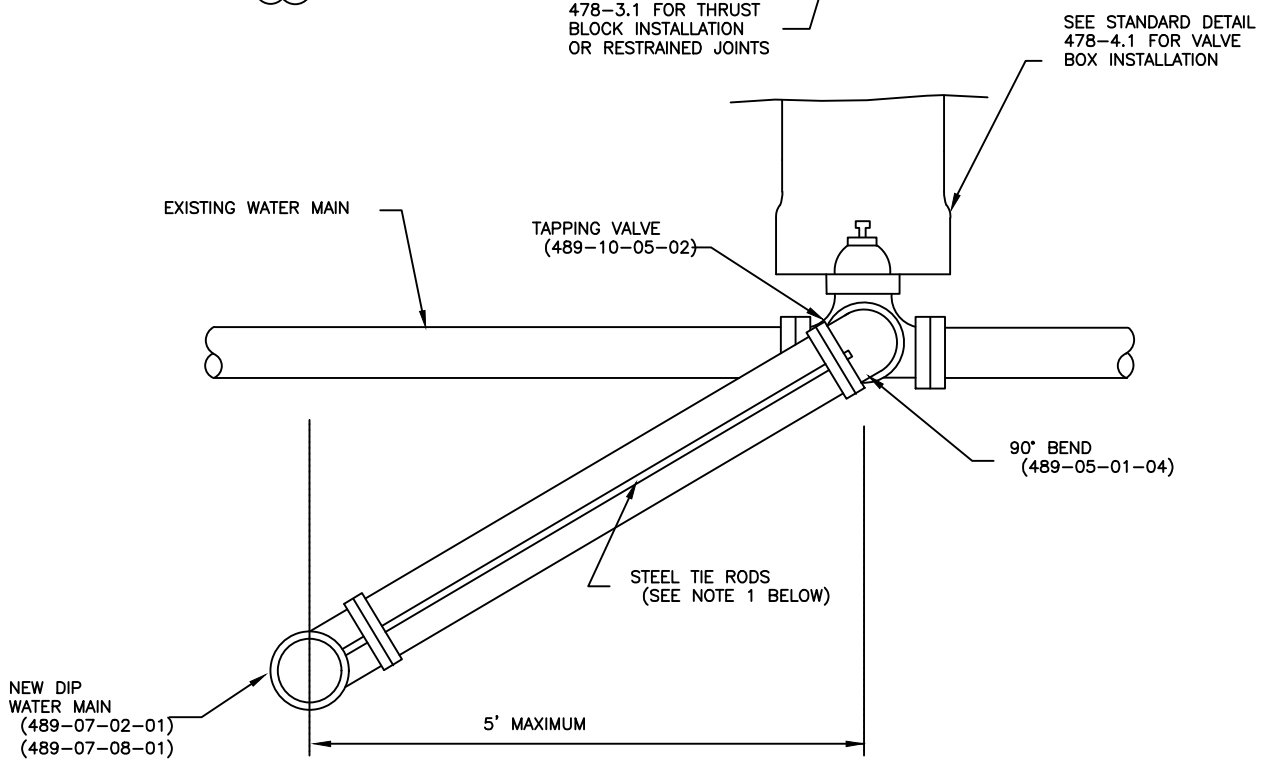

NOTES

1. FOR PIPE DIAMETER UP TO 12" USE TWO (2) 3/4" STEEL RODS. PIPE DIAMETERS OVER 12" USE (3) THREE 3/4" STEEL RODS. RESTRAINED JOINTS MAY BE USED IN LIEU OF RODS.

DATE REVISED: *AUGUST 9, 2012*			SECTION 488-4.1
Water & Sewer Department Utilities Division (352) 351-6772	CITY OF OCALA STANDARD DETAIL	CROSS CONNECTION	A SHT 1 OF 1

\\sharedept\Clust3\Water_sd-WS-Engineering\Water & Sewer Construction Manual\August 2012\Details\Water-Rev. April 2011\48841A 080912.dwg, 11/8/2016 1:21:54 PM

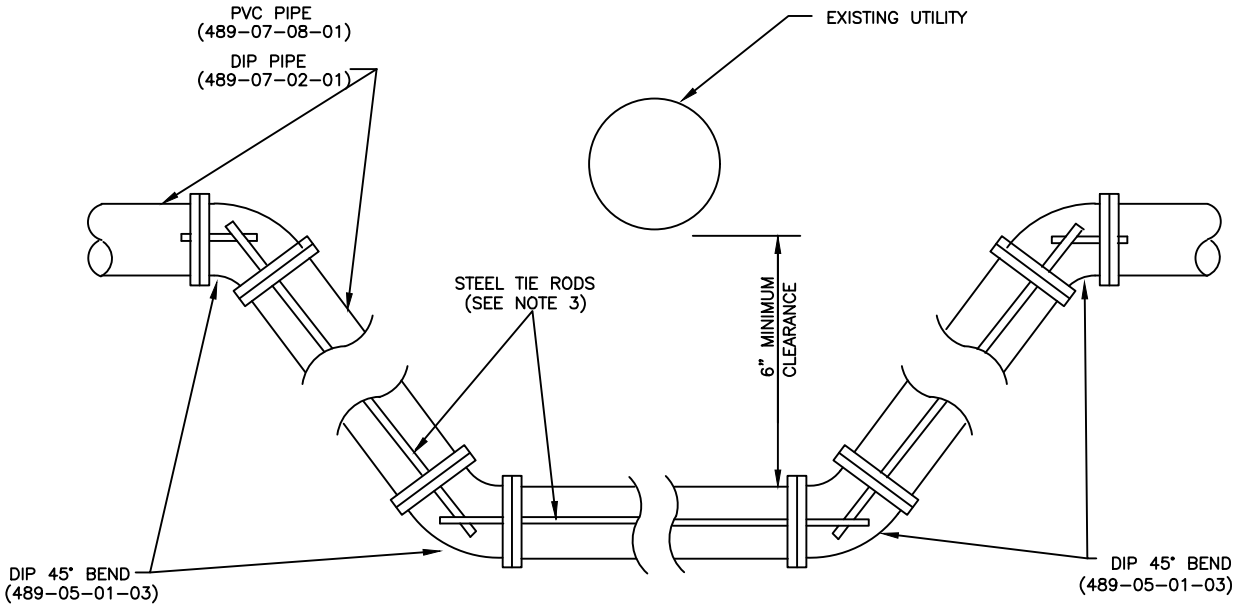

NOTES

1. FOR PIPE DIAMETERS UP TO 12" USE TWO (2) STEEL RODS. PIPE DIAMETERS OVER 12" USE THREE (3) 3/4" STEEL RODS. RESTRAINED JOINTS MAY BE USED IN LIEU OF RODS.
2. UNLESS OTHERWISE AUTHORIZED BY THE WATER AND SEWER ENGINEER, WATER MAIN BYPASS SHALL BE CONSTRUCTED BELOW THE CONFLICTING UTILITY.
3. MEGALUGS, RATED FOR THE PARTICULAR PIPE MATERIAL BEING INSTALLED, MAY BE USED IN LIEU OF THE TIE RODS. REFER TO WSCM 478-3.1C FOR ADDITIONAL FITTING RESTRAINT REQUIREMENTS.

DATE REVISED: *APRIL 1, 2010*			SECTION 488-4.2
Water & Sewer Department Utilities Division (352) 351-6772	CITY OF OCALA STANDARD DETAIL	WATER MAIN BY-PASS	A SHT 1 OF 1

\\sharedept\Clust3\Water_sd-WS-Engineering\Water & Sewer Construction Manual\August 2012\Details\Water-Rev. April 2011\48842A 040110.dwg, 11/8/2016 1:22:00 PM

NOTE: ALL PIPING AND APPURTENANCES TO BE 2" FOR 8" AND BELOW WATER MAINS; 4" FOR 12" WATER MAINS; 8" FOR 16" WATER MAINS; 12" FOR 24" WATER MAINS

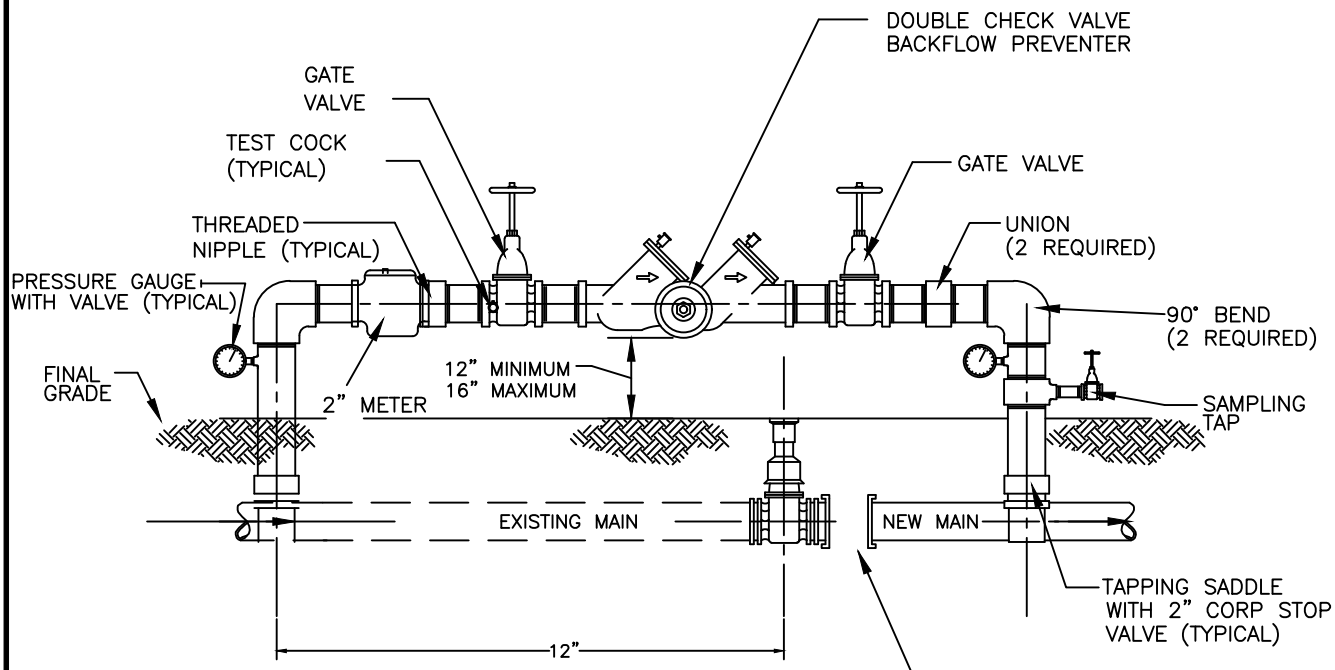

USE AT POINT(S) OF FILLING.
ALL OTHER LOCATIONS PROPOSED
FOR CONNECTION TO EXISTING
MAINS MUST REMAIN ISOLATED
UNTIL F.D.E.P. LETTER IS OBTAINED.

1. A TEMPORARY JUMPER CONNECTION IS REQUIRED AT ALL CONNECTIONS BETWEEN EXISTING ACTIVE WATER MAINS AND PROPOSED NEW WATER MAIN IMPROVEMENTS. TEMPORARY JUMPER WATER METERS WILL BE SUPPLIED BY THE CITY OF OCALA ORDINANCE SECTION 70-413.

2. THIS DETAIL IS TO BE USED FOR FILLING ANY NEW WATER MAIN OF ANY SIZE FOR EXISTING ACTIVE WATER MAINS AND FOR FLUSHING OF NEW MAINS, AND FOR PULLING BACTERIOLOGICAL SAMPLES FROM ANY NEW WATER MAIN OF ANY SIZE. THE JUMPER CONNECTION SHALL BE MAINTAINED UNTIL AFTER FILLING, FLUSHING, TESTING, AND DISINFECTION OF THE NEW MAIN HAS BEEN SUCCESSFULLY COMPLETED AND CLEARANCE FOR USE FROM THE FLORIDA DEPARTMENT OF ENVIRONMENTAL PROTECTION (FDEP) HAS BEEN RECEIVED. THIS JUMPER CONNECTION SHALL ALSO BE USED TO MAINTAIN A MINIMUM PRESSURE OF 20 PSI IN THE NEW MAINS ALL THE TIME AFTER DISINFECTION AND UNTIL THE FDEP CLEARANCE LETTER IS OBTAINED. ADEQUATE THRUST BLOCKING AND/OR RESTRAINTS SHALL BE PROVIDED TEMPORARILY, AS REQUIRED. PIPE AND FITTINGS USED FOR CONNECTING THE NEW PIPE TO THE EXISTING PIPE SHALL BE DISINFECTED PRIOR TO INSTALLATION IN ACCORDANCE WITH AWWA C651, LATEST EDITION. THE TAPPING SLEEVE AND THE EXTERIOR OF THE MAIN TO BE TAPPED SHALL BE DISINFECTED BY SPRAYING OR SWABBING PER SECTION II OF AWWA C651-LATEST.

3. UPON RECEIPT OF CLEARANCE FOR USE FROM FDEP AND THE CITY OF OCALA, THE CONTRACTOR SHALL REMOVE THE TEMPORARY JUMPER CONNECTION. THE 2" CORP VALVES ARE TO BE CLOSED AND PLUGGED WITH 2 INCH BRASS PLUGS. THE MAINS CAN NOW BE CONNECTED BY SLEEVE OR FLANGED CONNECTIONS.

4. ALL INSTALLATION AND MAINTENANCE OF THE TEMPORARY JUMPER CONNECTION AND ASSOCIATED BACK FLOW PREVENTION DEVICE, FITTINGS, VALVE, ETC., SHALL BE THE RESPONSIBILITY OF THE CONTRACTOR.

5. WATER FOR TESTING AND DISINFECTION OF THE NEW WATER MAIN AND WATER FOR MAINTENANCE OR OTHER USES SHALL BE AT THE CONTRACTOR'S EXPENSE.

DATE REVISED: *OCTOBER 29, 2007*			SECTION 488-5.1
Water & Sewer Department Utilities Division (352) 351-6772	CITY OF OCALA STANDARD DETAIL	TEMPORARY JUMPER CONNECTION	A SHT 1 OF 1

\\sharedept\Clust3\Water_sd-WS-Engineering\Water & Sewer Construction Manual\August 2012\Details\Water-Rev. April 2011\48851A 102907.dwg, 11/8/2016 1:22:05 PM

NOTE: ALL PIPING AND APPURTENANCES TO BE 2" FOR 8" AND BELOW WATER MAINS; 4" FOR 12" WATER MAINS; 8" FOR 16" WATER MAINS; 12" FOR 24" WATER MAINS

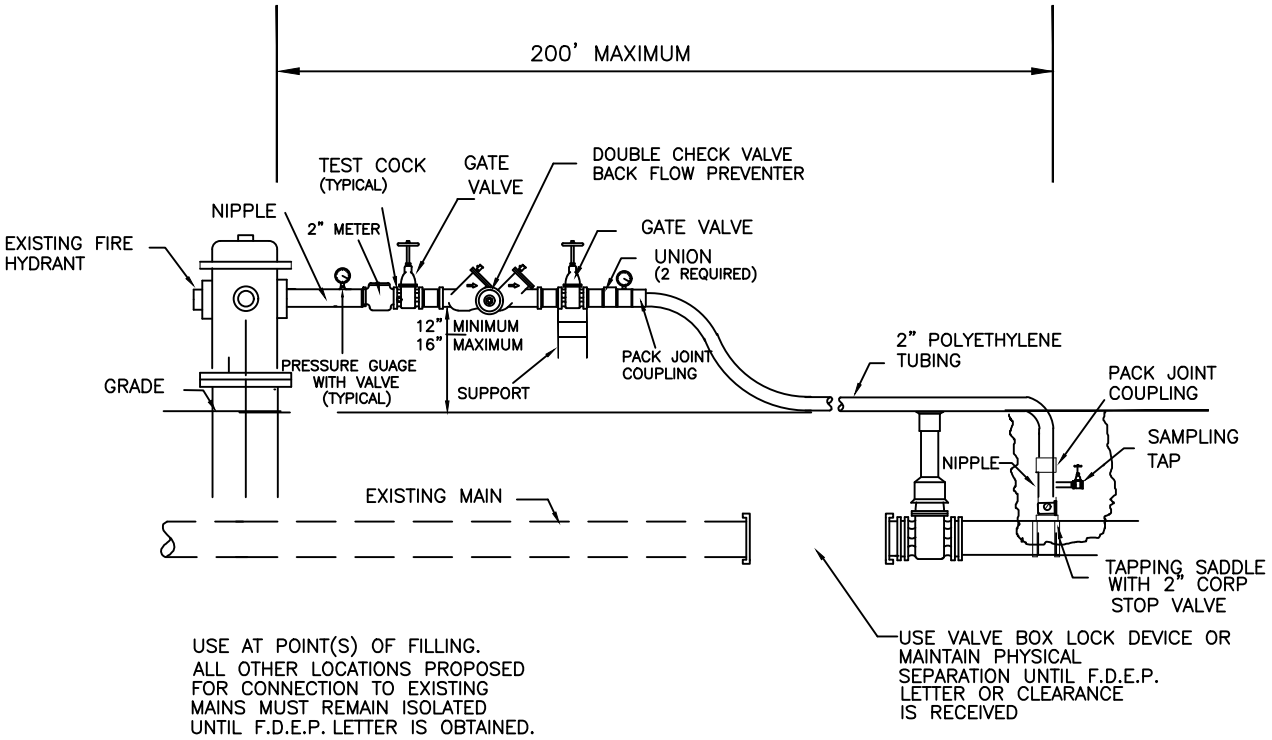

1. A TEMPORARY JUMPER CONNECTION IS REQUIRED AT ALL CONNECTIONS BETWEEN EXISTING ACTIVE WATER MAINS AND PROPOSED NEW WATER MAIN IMPROVEMENTS. TEMPORARY JUMPER WATER METERS WILL BE SUPPLIED BY THE CITY OF OCALA PER ORDINANCE SECTION 70-413.
2. THIS DETAIL IS TO BE USED FOR FILLING ANY NEW WATER MAIN OF ANY SIZE FOR EXISTING ACTIVE WATER MAINS AND FOR FLUSHING OF NEW MAINS, AND FOR PULLING BACTERIOLOGICAL SAMPLES FROM ANY NEW WATER MAIN OF ANY SIZE. THE JUMPER CONNECTION SHALL BE MAINTAINED UNTIL AFTER FILLING, FLUSHING, TESTING, AND DISINFECTION OF THE NEW MAIN HAS BEEN SUCCESSFULLY COMPLETED AND CLEARANCE FOR USE FROM THE FLORIDA DEPARTMENT OF ENVIRONMENTAL PROTECTION (FDEP) HAS BEEN RECEIVED. THIS JUMPER CONNECTION SHALL ALSO BE USED TO MAINTAIN A MINIMUM PRESSURE OF 20 PSI IN THE NEW MAINS ALL THE TIME AFTER DISINFECTION AND UNTIL THE FDEP CLEARANCE LETTER IS OBTAINED. ADEQUATE THRUST BLOCKING AND/OR RESTRAINTS SHALL BE PROVIDED TEMPORARILY, AS REQUIRED. PIPE AND FITTINGS USED FOR CONNECTING THE NEW PIPE TO THE EXISTING PIPE SHALL BE DISINFECTED PRIOR TO INSTALLATION IN ACCORDANCE WITH AWWA C651, LATEST EDITION. THE TAPPING SLEEVE AND THE EXTERIOR OF THE MAIN TO BE TAPPED SHALL BE DISINFECTED BY SPRAYING OR SWABBING PER SECTION II OF AWWA C651-LATEST.
3. UPON RECEIPT OF CLEARANCE FOR USE FROM FDEP AND THE CITY OF OCALA, THE CONTRACTOR SHALL REMOVE THE TEMPORARY JUMPER CONNECTION. THE 2" CORP VALVE IS TO BE CLOSED AND PLUGGED WITH A 2 INCH BRASS PLUG. THE MAINS CAN NOW BE CONNECTED BY SLEEVE OR FLANGED CONNECTIONS.
4. ALL INSTALLATION AND MAINTENANCE OF THE TEMPORARY JUMPER CONNECTION AND ASSOCIATED BACKFLOW PREVENTION DEVICE, FITTINGS, VALVE, ETC., SHALL BE THE RESPONSIBILITY OF THE CONTRACTOR.
5. WATER FOR TESTING AND DISINFECTION OF THE NEW WATER MAIN AND WATER FOR MAINTENANCE OR OTHER USES SHALL BE AT THE CONTRACTOR'S EXPENSE.

DATE REVISED: *OCTOBER 29, 2007*			SECTION 488-5.1
Water & Sewer Department Utilities Division (352) 351-6772	CITY OF OCALA STANDARD DETAIL	TEMPORARY JUMPER CONNECTION WITH FIRE HYDRANT	B SHT 1 OF 1

\\sharedept\Clust3\Water_sd-WS-Engineering\Water & Sewer Construction Manual\August 2012\Details\Water-Rev. April 2011\48851B 102907.dwg, 11/8/2016 1:22:10 PM

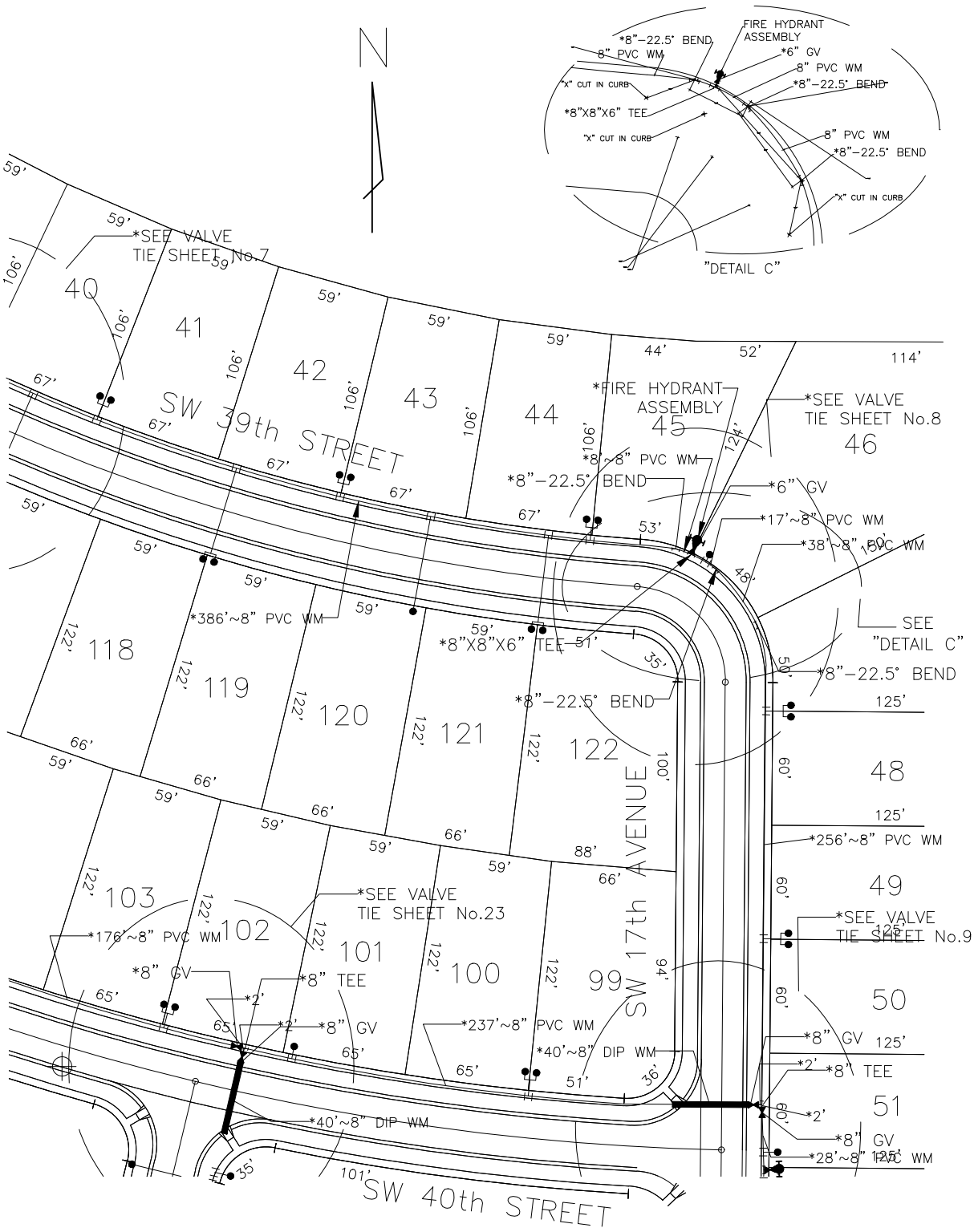

DATE REVISED: *MAY 3, 2007*			SECTION 488-8.1
Water & Sewer Department Utilities Division (352) 351-6772	CITY OF OCALA STANDARD DETAIL	TYPICAL WATER ASBUILT DRAWING	A SHT 1 OF 1

\\sharedept\Clust3\Water_sd-WS-Engineering\Water & Sewer Construction Manual\August 2012\Details\Water-Rev. April 2011\48881a 050307.dwg, 11/8/2016 1:19:02 PM

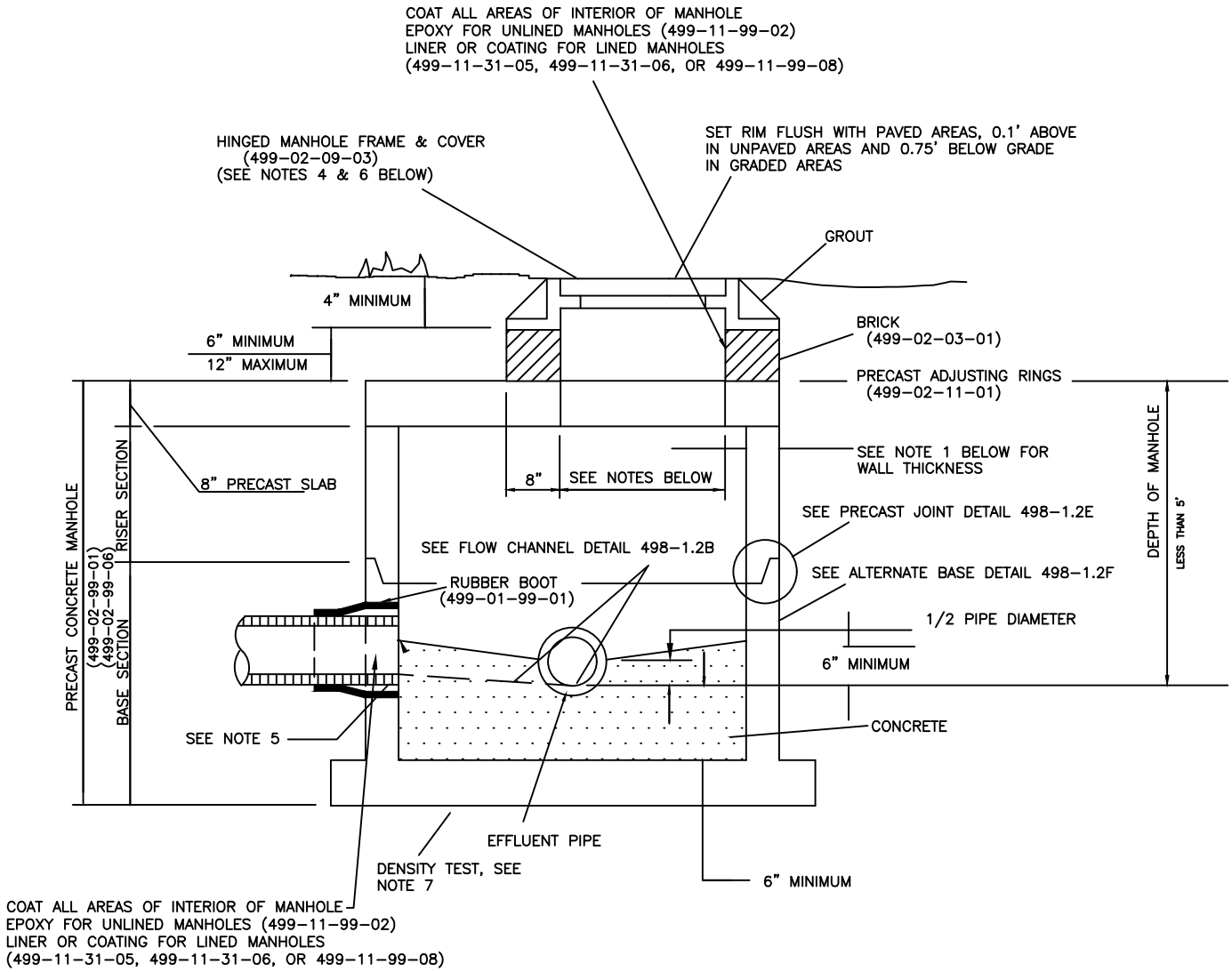

NOTES

1. MINIMUM WALL THICKNESS SHALL BE FIVE INCHES (5") OR 1/12 THE INSIDE DIAMETER, WHICHEVER IS GREATER.
2. THE INTERIOR, EXTERIOR, JOINTS AND GROUTED AREAS SHALL BE COATED WITH TWO (2) COATS OF BITUMASTIC SEALER (499-11-99-02). WHERE FORCE MAINS ARE TO BE CONNECTED OR THE MANHOLE LIES IMMEDIATELY UPSTREAM FROM THE WET WELL THE COMPLETE INSIDE OF THE MANHOLE SHALL BE LINED AS SPECIFIED ON THE PLANS. LINING SHALL BE HDPE (499-02-99-06).
3. MANHOLES SHALL BE FURNISHED WITH FACTORY INSTALLED BOOTS (499-01-99-01) TO CONNECT SEWER PIPES TO MANHOLES.
4. MANHOLE TO BE INSTALLED WITH 24" HINGED RING AND COVER. (499-02-09-03).
5. FILL ANNULAR VOID BETWEEN PIPE AND RUBBER BOOT WITH GROUT AND FLUSH WITH MANHOLE WALLS.
6. EACH MANHOLE INSTALLED SHALL HAVE ONE COMPACTION DENSITY TEST PER 491.4.1.1 IN SPECIFICATIONS, 100% STANDARD PROCTOR.
7. LIMEROCK WILL BE PLACED AROUND RING AND COVER TO BOTTOM OF ASPHALT.

DATE REVISED: *DECEMBER 19, 2012*			SECTION 498-1.1
Water & Sewer Department Utilities Division (352) 351-6772	CITY OF OCALA STANDARD DETAIL	PRECAST CONCRETE MANHOLE	A
		LESS THAN 5' DEPTH	SHT 1 OF 1

\\sharedept\Clust3\Water_sd-WS-Engineering\Water & Sewer Construction Manual\August 2012\Details\Sewer-Rev. August 2012\49811A 121912.dwg, 11/8/2016 1:52:26 PM

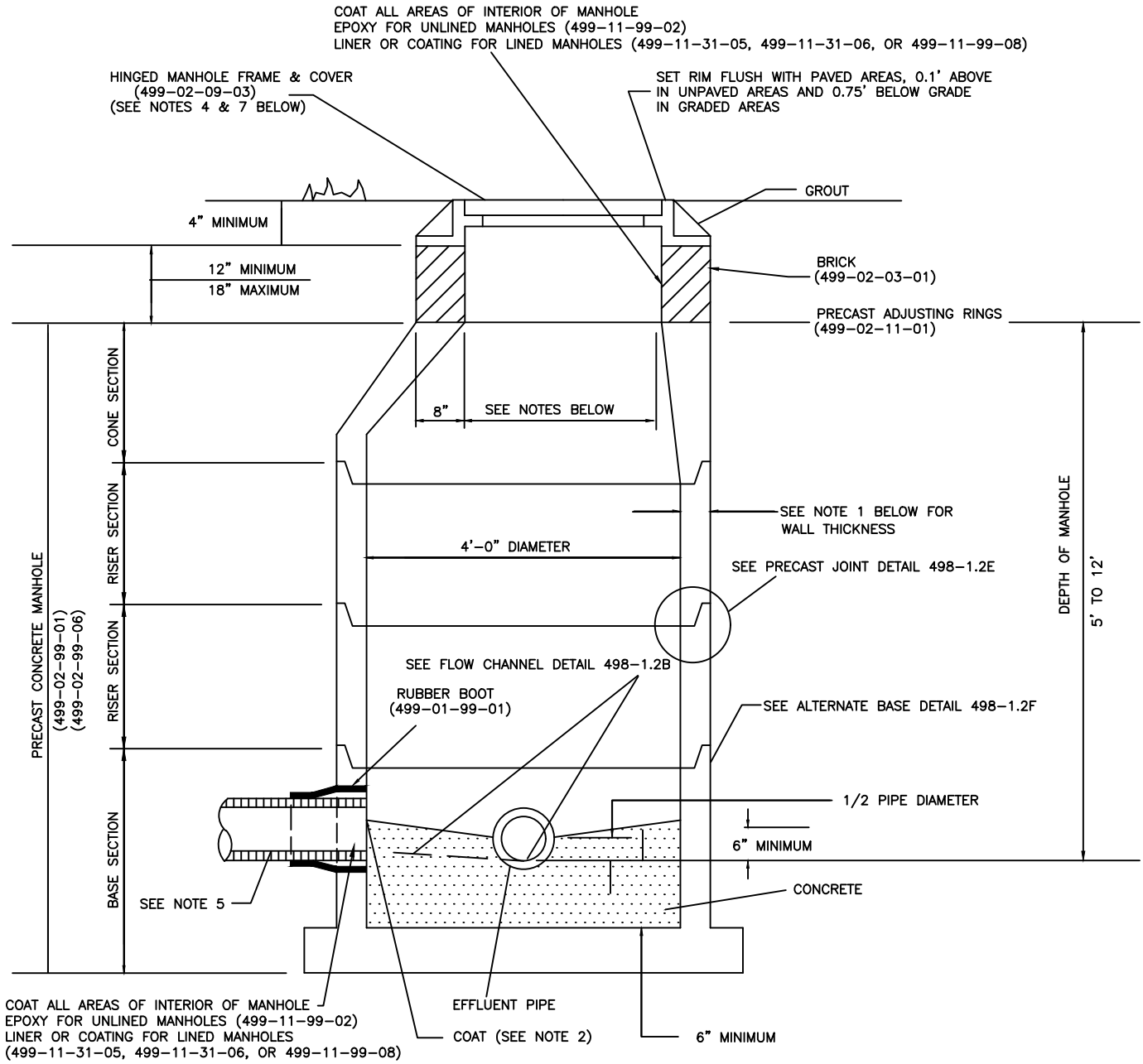

NOTES

1. MINIMUM WALL THICKNESS SHALL BE FIVE INCHES (5") OR 1/12 THE INSIDE DIAMETER, WHICHEVER IS GREATER.
2. THE INTERIOR, EXTERIOR, JOINTS AND GROUTED AREAS SHALL BE COATED WITH TWO (2) COATS OF BITUMASTIC SEALER (499-11-99-02). WHERE FORCE MAINS ARE TO BE CONNECTED OR THE MANHOLE LIES IMMEDIATELY UPSTREAM FROM THE WET WELL THE COMPLETE INSIDE OF THE MANHOLE SHALL BE LINED AS SPECIFIED ON THE PLANS. LINING SHALL BE HDPE (499-02-99-06).
3. MANHOLES SHALL BE FURNISHED WITH FACTORY INSTALLED BOOTS (499-01-99-01) TO CONNECT SEWER PIPES TO MANHOLES.
4. MANHOLE TO BE INSTALLED WITH 24" HINGED RING AND COVER. (499-02-09-03).
5. FILL ANNULAR VOID BETWEEN PIPE AND RUBBER BOOT WITH GROUT AND FLUSH WITH MANHOLE WALL.
6. LIMEROCK WILL BE PLACED AROUND RING & COVER TO BOTTOM OF ASPHALT.
7. EACH MANHOLE INSTALLED SHALL HAVE ONE COMPACTION DENSITY TEST PER 491.4.1.1 IN SPECIFICATIONS, 100% STANDARD PROCTOR.

DATE REVISED: *DECEMBER 19, 2012*			SECTION 498-1.1
Water & Sewer Department Utilities Division (352) 351-6772	CITY OF OCALA STANDARD DETAIL	PRECAST CONCRETE MANHOLE 5' TO 12' DEPTH	B SHT 1 OF 1

\\sharedept\Clust3\Water_sd-WS-Engineering\Water & Sewer Construction Manual\August 2012\Details\Sewer-Rev. August 2012\49811B 121912.dwg, 11/8/2016 1:52:34 PM

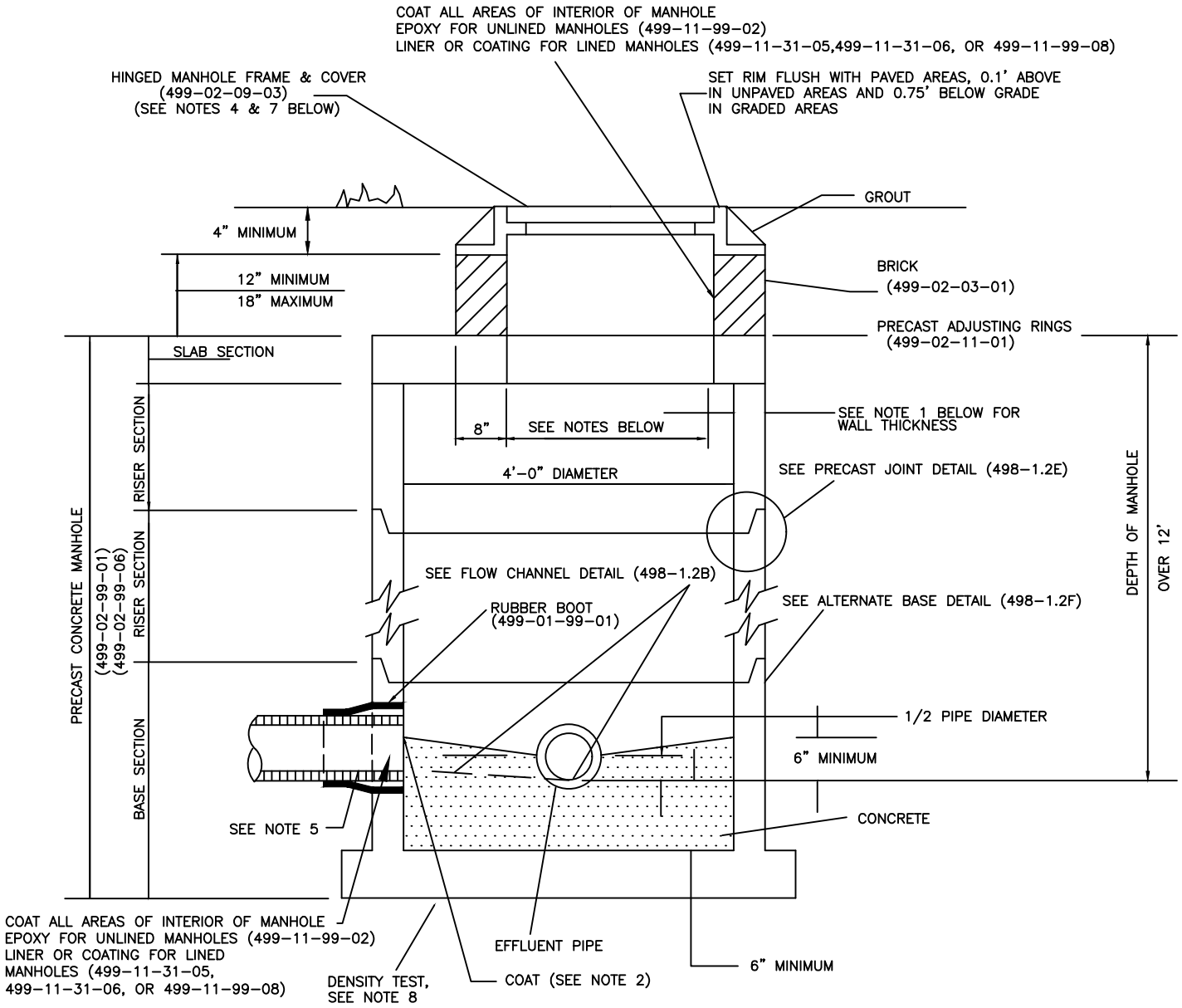

NOTES

1. MINIMUM WALL THICKNESS SHALL BE FIVE INCHES (5") TO A DEPTH OF TEN FEET (10'). WALL THICKNESS SHALL BE INCREASED TO TO EIGHT INCHES (8") AT TEN FEET BELOW GRADE.
2. THE INTERIOR, EXTERIOR, JOINTS AND GROUTED AREAS SHALL BE COATED WITH TWO (2) COATS OF BITUMASTIC SEALER (499-11-99-02). WHERE FORCE MAINS ARE TO BE CONNECTED OR THE MANHOLE LIES IMMEDIATELY UPSTREAM FROM THE WET WELL THE COMPLETE INSIDE OF THE MANHOLE SHALL BE LINED AS SPECIFIED ON THE PLANS. LINING SHALL BE HDPE (499-02-99-06).
3. MANHOLES SHALL BE FURNISHED WITH FACTORY INSTALLED BOOTS (499-01-99-01) TO CONNECT SEWER PIPES TO MANHOLES.
4. MANHOLE TO BE INSTALLED WITH 32" OR 36" HINGED RING AND COVER (499-02-09-03).
5. FILL ANNULAR SPACE BETWEEN PIPE AND BOOT WITH GROUT AND FLUSH WITH WALL OF MANHOLE.
6. LIMEROCK WILL BE PLACED AROUND RING AND COVER TO BOTTOM OF ASPHALT.
7. EACH MANHOLE INSTALLED SHALL HAVE ONE COMPACTION DENSITY TEST PER 491.4.1.1 IN SPECIFICATIONS 100% STANDARD PROCTOR.

DATE REVISED: *DECEMBER 19, 2012*			SECTION 498-1.1
Water & Sewer Department Utilities Division (352) 351-6772	CITY OF OCALA STANDARD DETAIL	PRECAST CONCRETE MANHOLE OVER 12' DEPTH	C SHT 1 OF 1

\\sharedept\Clust3\Water_sd-WS-Engineering\Water & Sewer Construction Manual\August 2012\Details\Sewer-Rev. August 2012\49811C 121912.dwg, 11/8/2016 1:52:38 PM

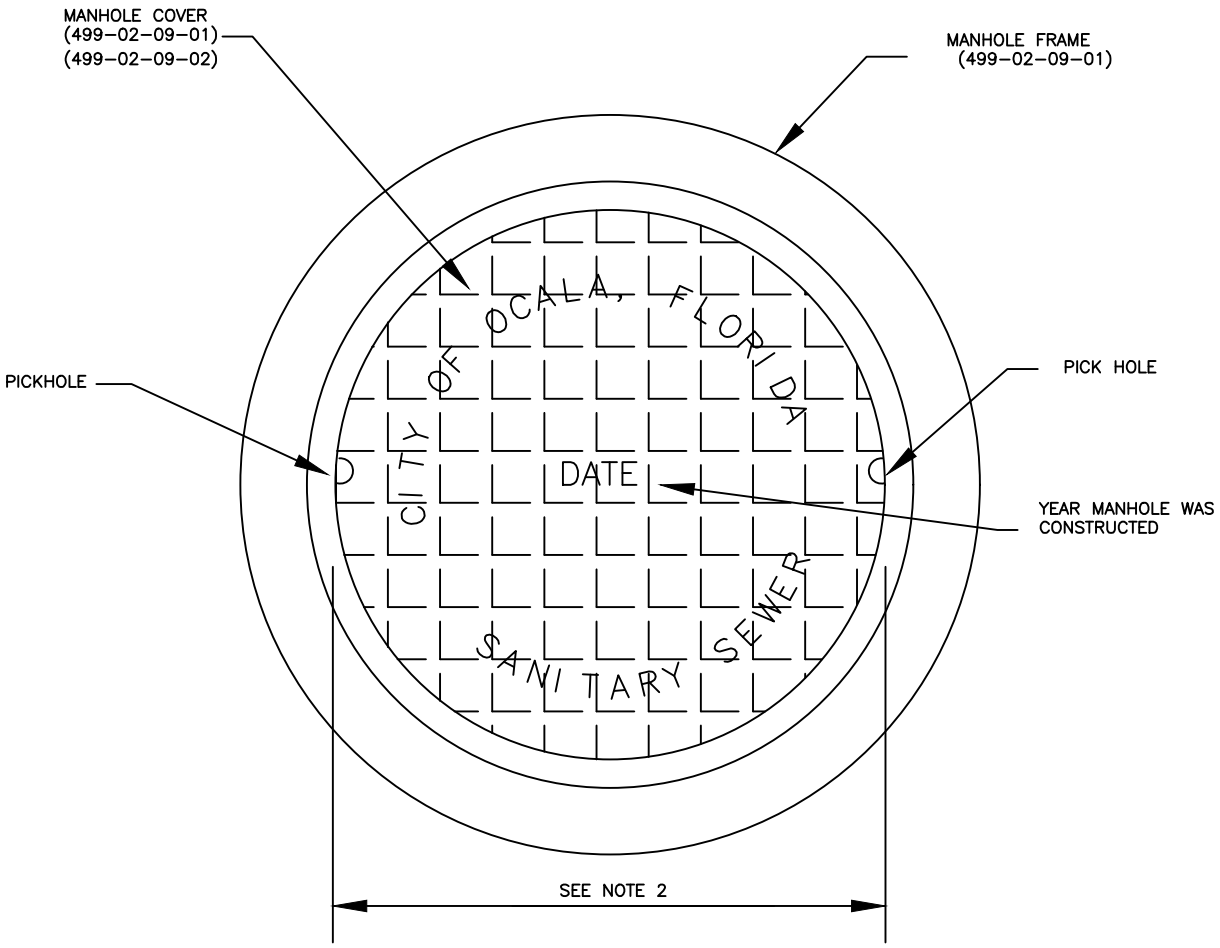

NOTES

1. MANHOLE COVER SHALL BE LETTERED WITH THE WORDS "CITY OF OCALA FLORIDA" ACROSS THE TOP, "SANITARY SEWER" ACROSS THE BOTTOM AND THE YEAR OF THE MANUFACTURE IN CENTER.
2. UNLESS OTHERWISE SPECIFIED MANHOLE COVERS SHALL BE 22" DIAMETER, AND DOUBLE COVERS DEPENDING ON DEPTH. 32" DIAMETER.
3. NOT STANDARD, ONLY USED IF APPROVED BY CITY OF OCALA.

DATE REVISED: *AUGUST 14, 2012*			SECTION 498-1.2
Water & Sewer Department Utilities Division (352) 351-6772	CITY OF OCALA STANDARD DETAIL	SANITARY SEWER	A
		MANHOLE COVER	SHT 1 OF 2

\\sharedept\Clust3\Water_sd-WS-Engineering\Water & Sewer Construction Manual\August 2012\Details\Sewer-Rev. August 2012\49812A1 081412.dwg, 11/8/2016 1:52:45 PM

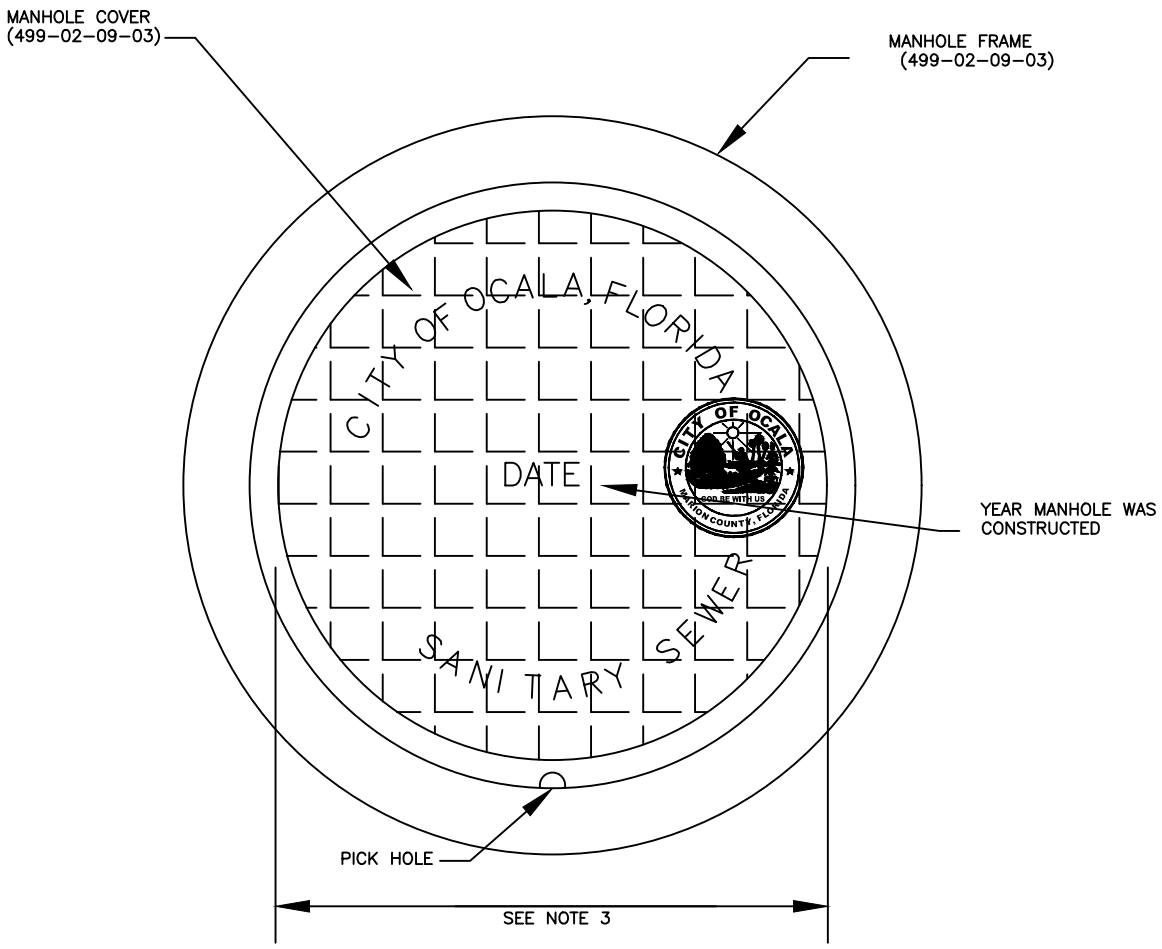

NOTES

1. MANHOLE COVER SHALL BE LETTERED WITH THE WORDS "SANITARY SEWER" AND THE YEAR OF THE MANUFACTURE.
2. CITY OF OCALA IDENTIFICATION LABEL SHALL BE BOLTED ON COVER.
3. UNLESS OTHERWISE SPECIFIED MANHOLE COVERS SHALL BE 24" DIAMETER AND 32" DIAMETER DEPENDING ON DEPTH.
4. ALL MANHOLE COVERS SHALL BE FURNISHED WITH HINGES AND LOCKING DEVICE.
5. WHERE MANHOLE COVERS ARE NOT INSTALLED IN CENTER OF TWO WAY TRAFFIC, HINGED SIDE OF COVER TO BE INSTALLED TOWARDS ONCOMING TRAFFIC.
6. STANDARD, USE ON ALL MANHOLES.

DATE REVISED: *AUGUST 14, 2012*			SECTION 498-1.2
Water & Sewer Department Utilities Division (352) 351-6772	CITY OF OCALA STANDARD DETAIL	SANITARY SEWER HINGED MANHOLE COVER	A SHT 2 OF 2

\\sharedept\Clust3\Water_sd-WS-Engineering\Water & Sewer Construction Manual\August 2012\Details\Sewer-Rev. August 2012\49812A2 081412.dwg, 11/8/2016 1:52:49 PM

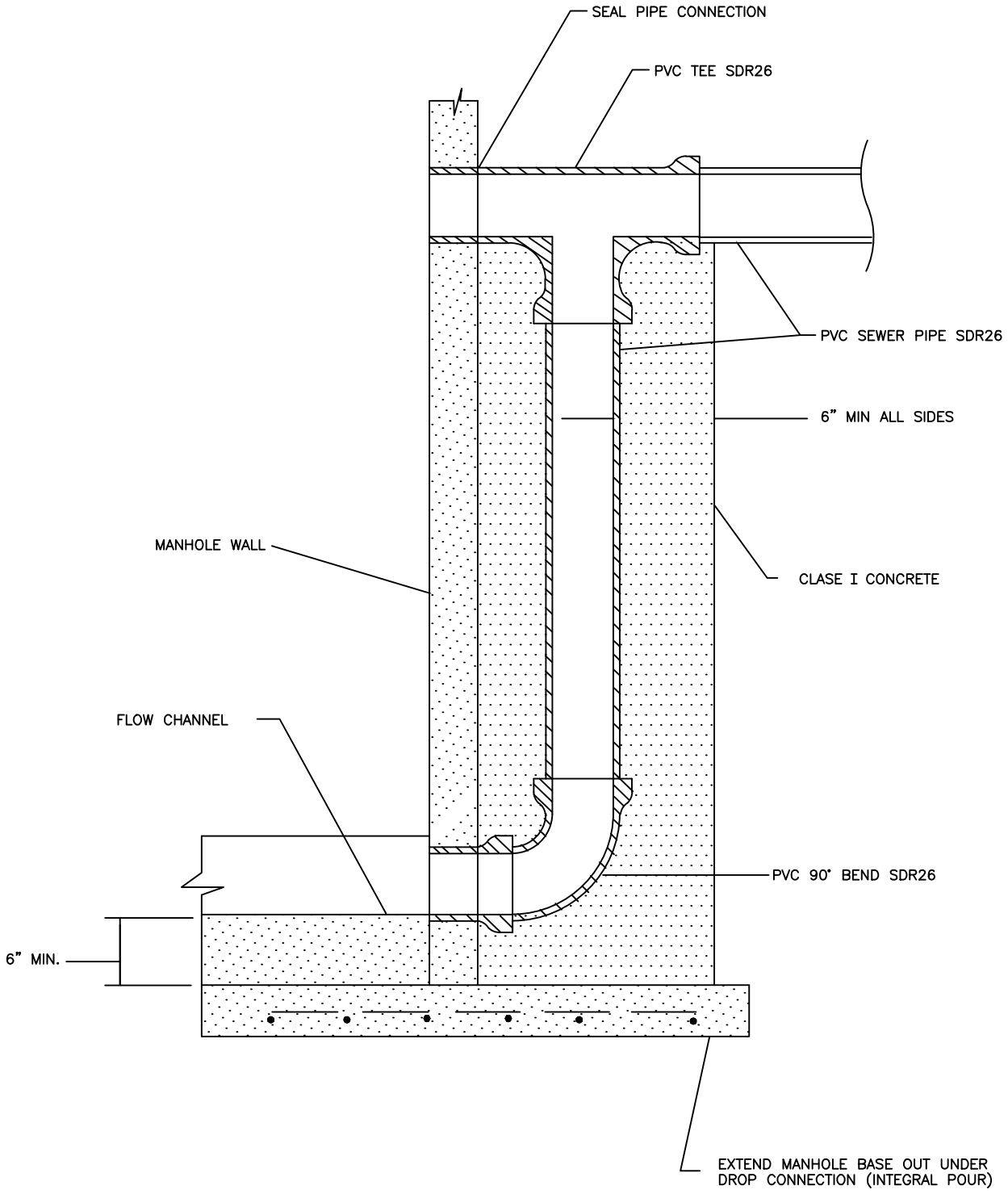

DATE REVISED: *AUGUST 14, 2012*

SECTION 498–1.2

Water & Sewer Department
Utilities Division
(352) 351–6772

CITY OF OCALA
STANDARD DETAIL

SANITARY SEWER

MANHOLE DROP CONNECTION

C

SHT 1 OF 1

\\sharedept\Clust3\Water_sd-WS-Engineering\Water & Sewer Construction Manual\August 2012\Details\Sewer-Rev. August 2012\49812C 081412.dwg, 11/8/2016 1:52:56 PM

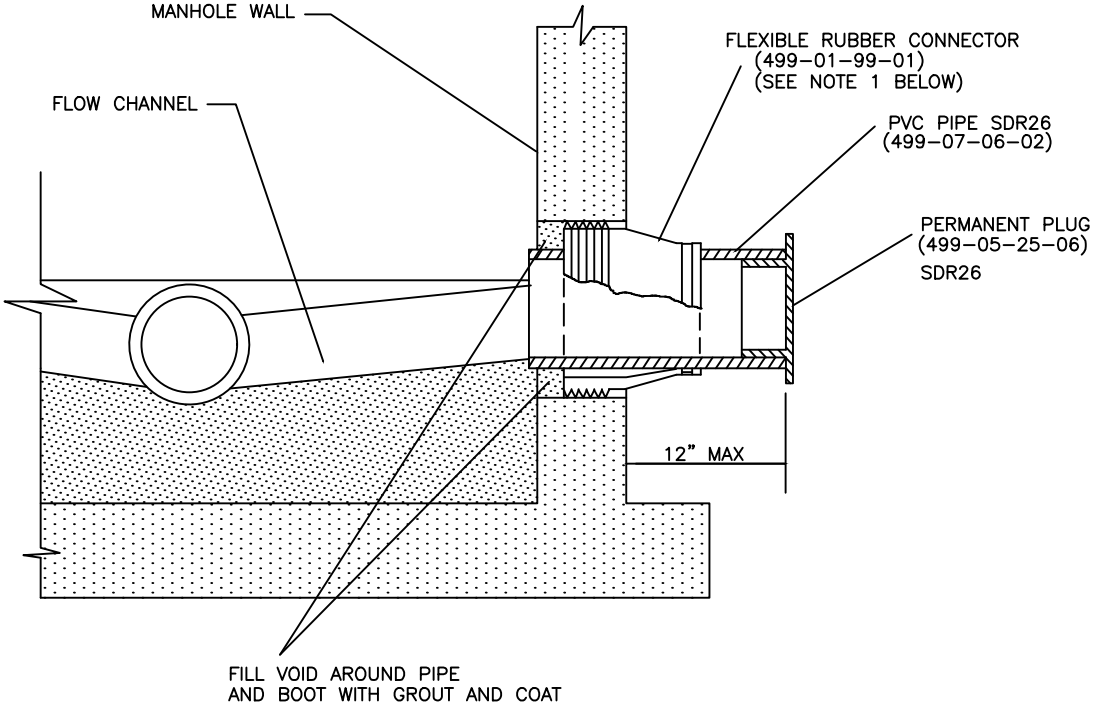

NOTES

1. BOOTS SHALL BE INSTALLED BY THE MANUFACTURER OF THE PRECAST MANHOLE IN ACCORDANCE WITH THE BOOT MANUFACTURERS INSTRUCTIONS.

DATE REVISED: *AUGUST 14, 2012*			SECTION 498-1.2
Water & Sewer Department Utilities Division (352) 351-6772	CITY OF OCALA STANDARD DETAIL	SANITARY SEWER	D
		MANHOLE STUBOUT	SHT 1 OF 1

\\sharedept\Clust3\Water_sd-WS-Engineering\Water & Sewer Construction Manual\August 2012\Details\Sewer-Rev. August 2012\49812D 081412.dwg, 11/8/2016 1:53:04 PM

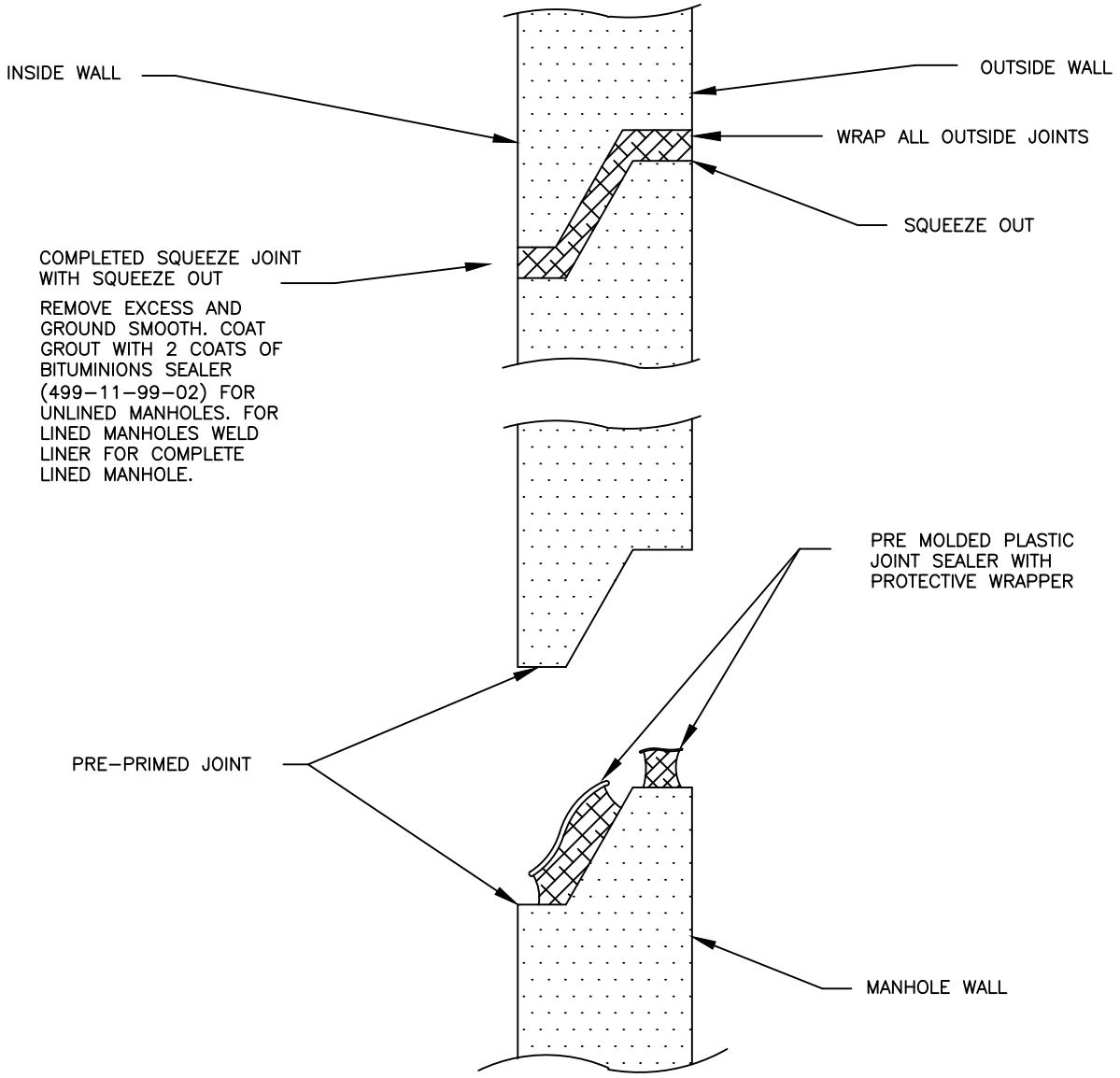

DATE REVISED: *AUGUST 14, 2012*			SECTION 498-1.2
Water & Sewer Department Utilities Division (352) 351-6772	CITY OF OCALA STANDARD DETAIL	PRECAST CONCRETE MANHOLE JOINT CONSTRUCTION	E SHT 1 OF 1

\\sharedept\Clust3\Water_sd-WS-Engineering\Water & Sewer Construction Manual\August 2012\Details\Sewer-Rev. August 2012\49812E 081412.dwg, 11/8/2016 1:53:08 PM

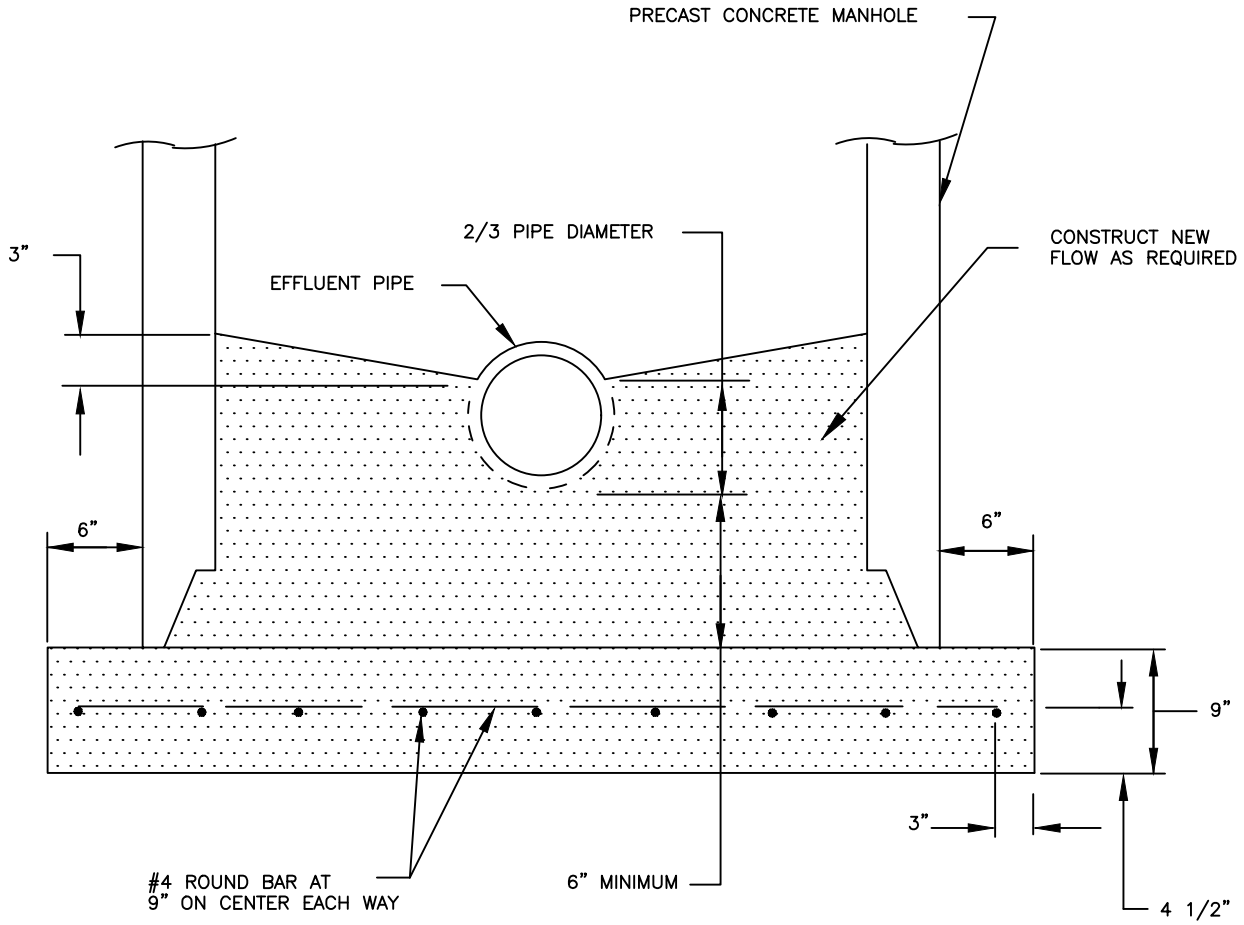

NOTES

1. MANHOLE MUST BE LEAK OR AIR TESTED

DATE REVISED: *DECEMBER 19, 2012*			SECTION 498–1.2
Water & Sewer Department Utilities Division (352) 351–6772	CITY OF OCALA STANDARD DETAIL	PRECAST CONCRETE MANHOLE	F
		ALTERNATE BASE CONSTRUCTION	SHT 1 OF 1

\\sharedept\Clust3\Water_sd-WS-Engineering\Water & Sewer Construction Manual\August 2012\Details\Sewer-Rev. August 2012\49812F 121912.dwg, 11/8/2016 1:53:12 PM

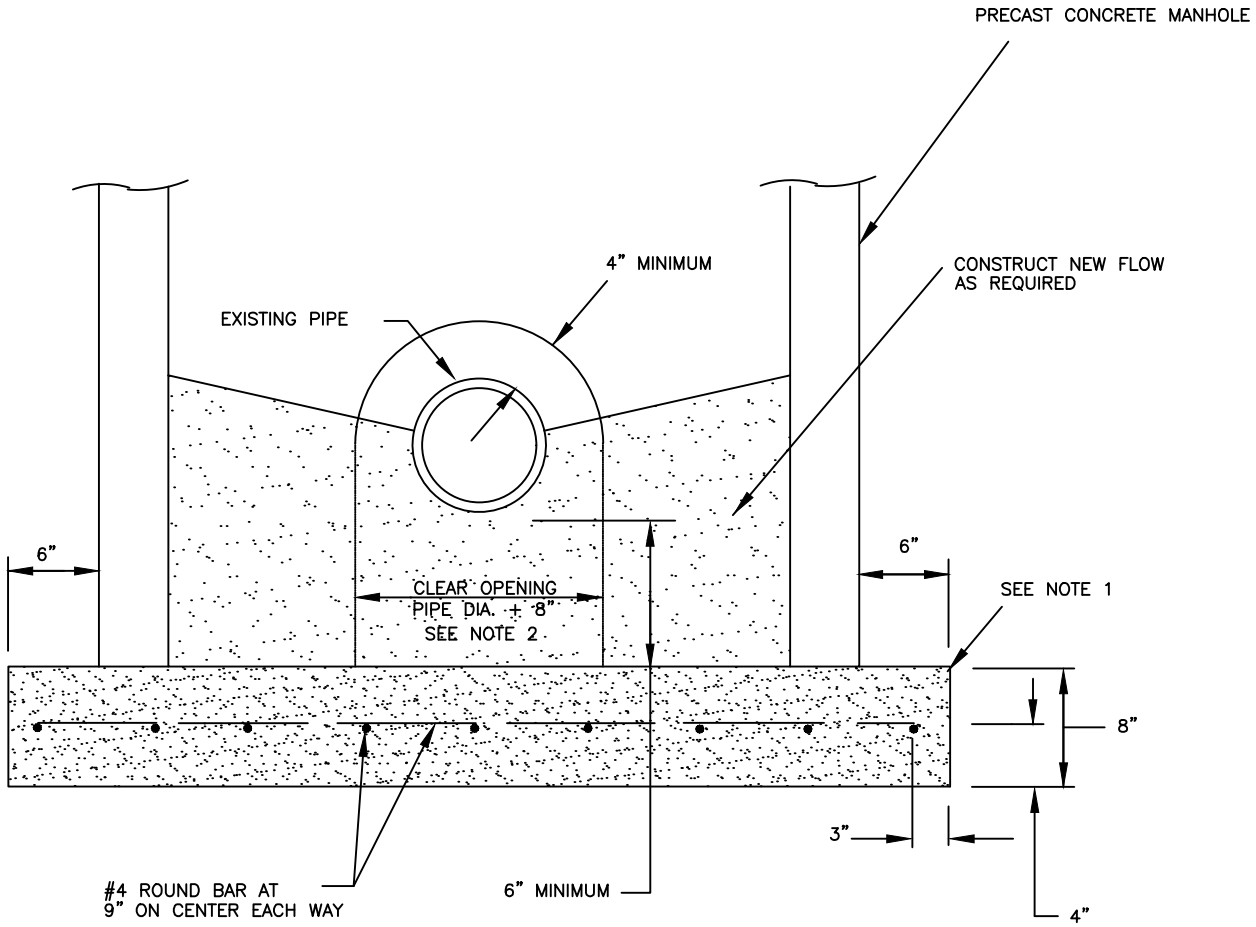

NOTES

1. MANHOLE BASE CAN BE EITHER CAST IN PLACE AS SHOWN OR PRECAST BY AN APPROVED PRECASTER.
2. FILL VOID WITH BRICK AND GROUT AS APPROVED BY THE WATER AND SEWER ENGINEER.
3. MANHOLE MUST BE LEAK OR AIR TESTED.

DATE REVISED: *AUGUST 14, 2012*			SECTION 498.1.2
Water & Sewer Department Utilities Division (352) 351-6772	CITY OF OCALA STANDARD DETAIL	DOGHOUSE MANHOLE	G
		BASE CONSTRUCTION	SHT 1 OF 1

\\sharedept\Clust3\Water_sd-WS-Engineering\Water & Sewer Construction Manual\August 2012\Details\Sewer-Rev. August 2012\49812G 081412.dwg, 11/8/2016 1:53:15 PM

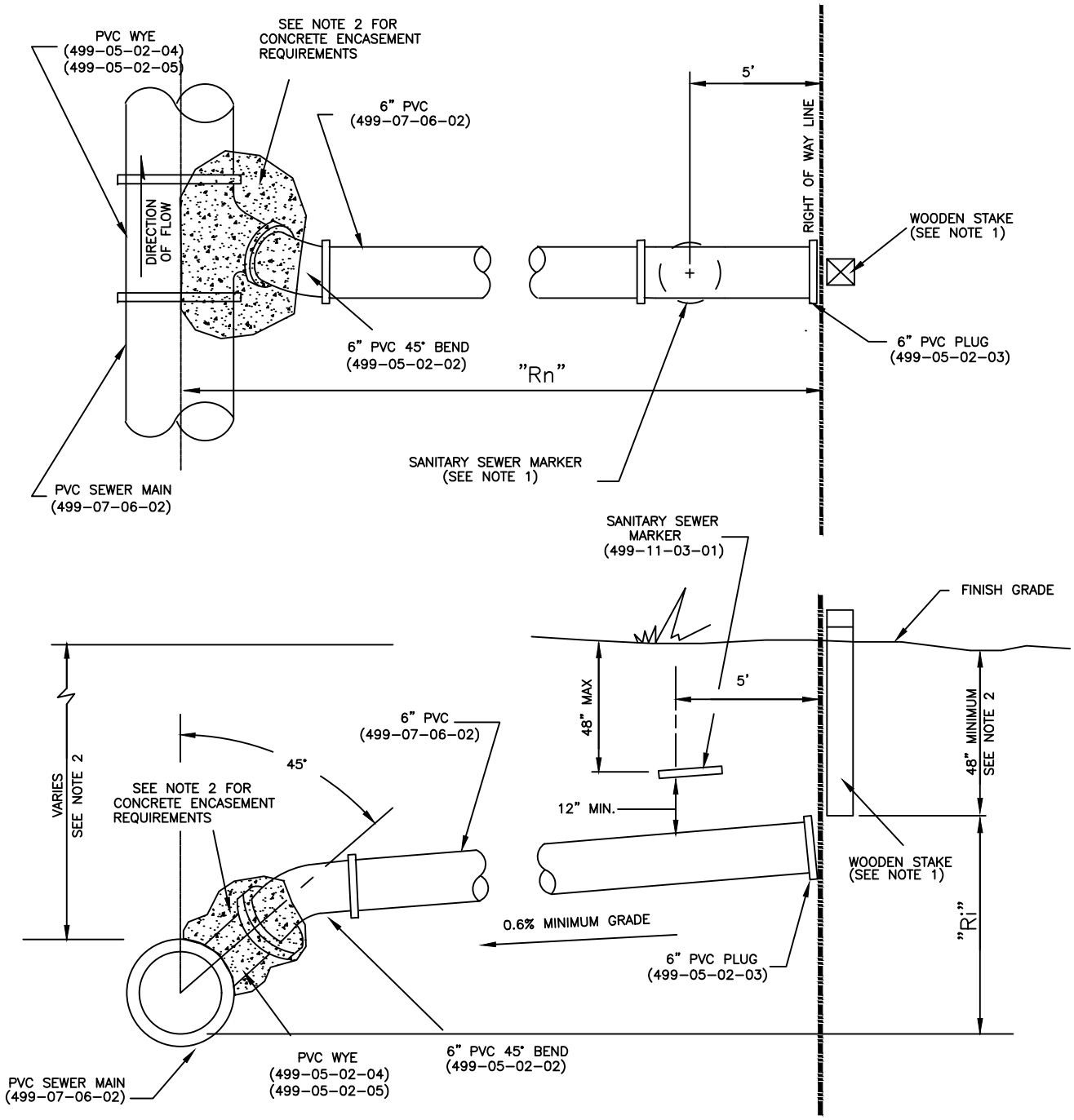

NOTES

1. SEWER SERVICE TO BE REFERENCED AS INDICATED IN SECTION 498-2.1C
2. FOR ANY SEWER SERVICES WHERE THE PIPE SLOPE EQUALS OR EXCEEDS A 1:5 (Ri/Rn) OR 20% SLOPE, ENCASE SEWER WYE AND BEND IN CONCRETE. CONCRETE ENCASEMENT TO BE 2 CUBIC FEET MINIMUM WHERE REQUIRED.

DATE REVISED: *AUGUST 14, 2012*			SECTION 498-2.1
Water & Sewer Department Utilities Division (352) 351-6772	CITY OF OCALA STANDARD DETAIL	SANITARY SEWER SERVICE	A
		SINGLE SEWER SERVICE	SHT 1 OF 1

\\sharedept\Clust3\Water_sd-WS-Engineering\Water & Sewer Construction Manual\August 2012\Details\Sewer-Rev. August 2012\49821A 081412.dwg, 11/8/2016 1:53:21 PM

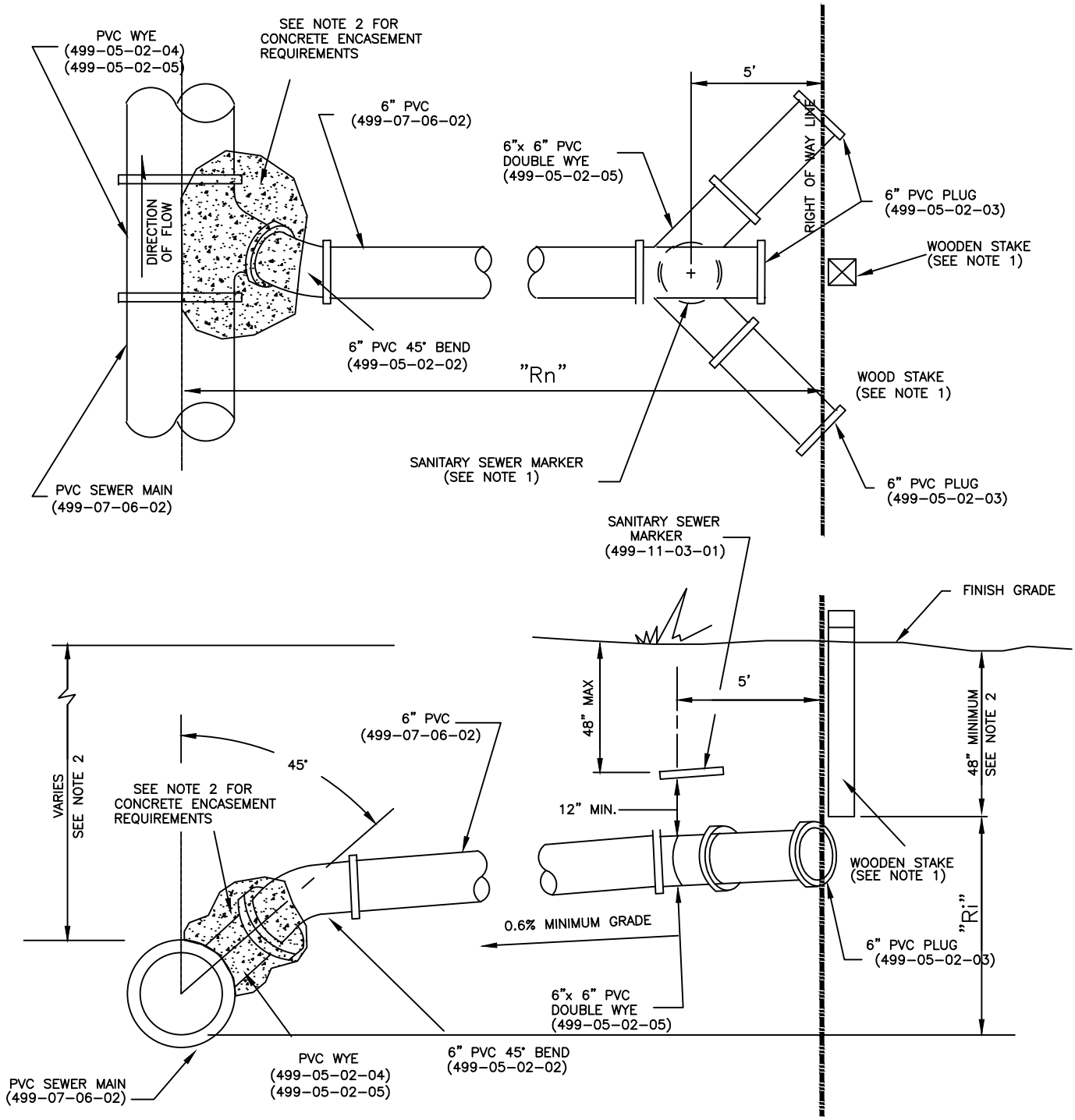

NOTES

1. SEWER SERVICE TO BE REFERENCED AS INDICATED IN SECTION 498-2.1C
2. FOR ANY SEWER SERVICES WHERE THE PIPE SLOPE EQUALS OR EXCEEDS A 1:5 (Ri/Rn) OR 20% SLOPE, ENCASE SEWER WYE AND BEND IN CONCRETE. CONCRETE ENCASEMENT TO BE 2 CUBIC FEET MINIMUM WHERE REQUIRED.
3. DOUBLE SEWER SERVICES SHALL ONLY BE INSTALLED IN SPECIAL CASES AS DESIGNATED BY THE WATER AND SEWER ENGINEER.

DATE REVISED: *AUGUST 14, 2012*			SECTION 498-2.1
Water & Sewer Department Utilities Division (352) 351-6772	CITY OF OCALA STANDARD DETAIL	SANITARY SEWER SERVICE DOUBLE SEWER SERVICE	B SHT 1 OF 1

\\sharedept\Clust3\Water_sd-WS-Engineering\Water & Sewer Construction Manual\August 2012\Details\Sewer-Rev. August 2012\49821B 081412.dwg, 11/8/2016 1:53:28 PM

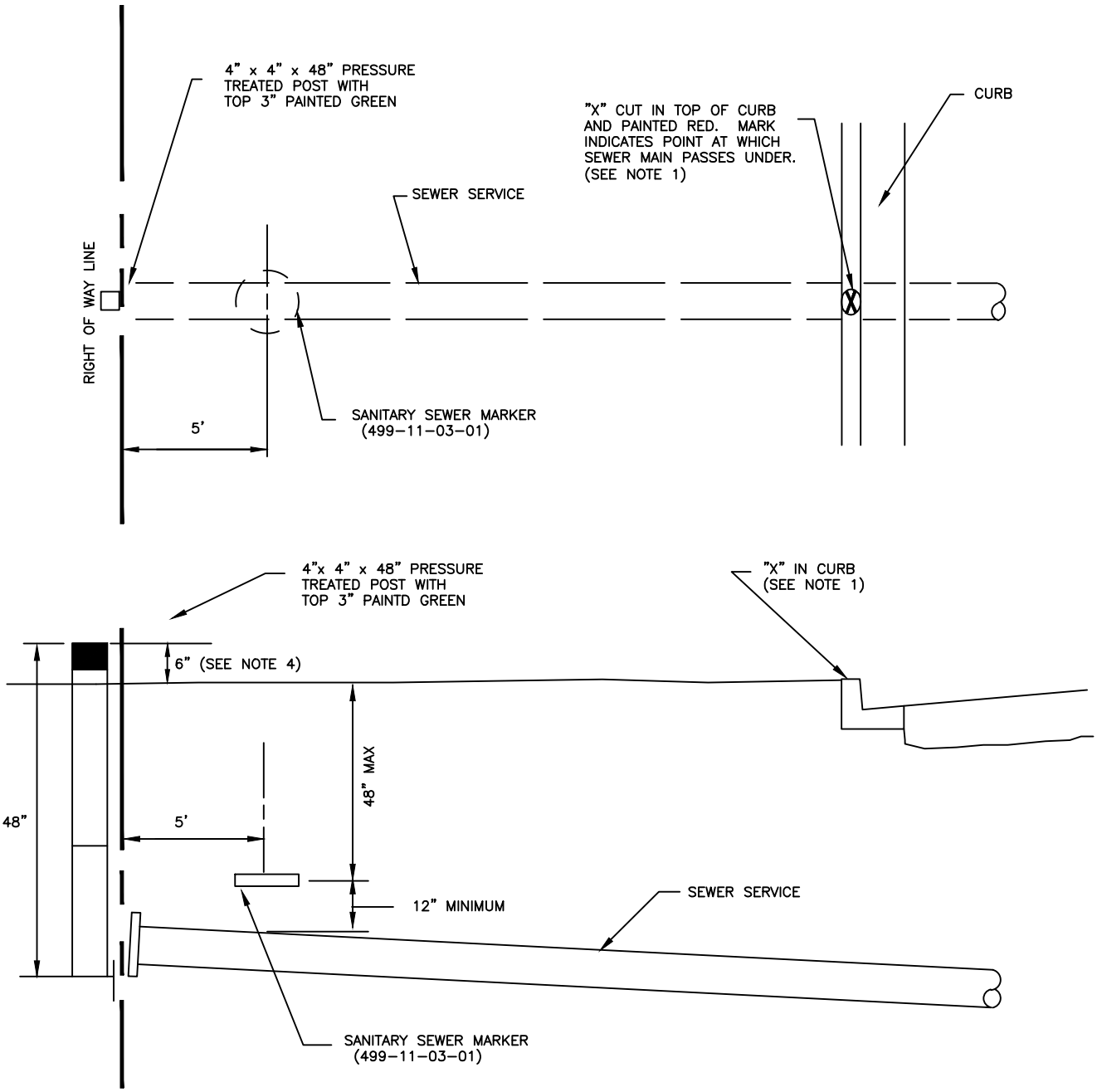

NOTES

1. WHERE NO CURB AND GUTTER EXIST, THE SEWER SERVICE SHALL BE REFERENCED BY PLACING A NAIL & DISC AND AT THE EDGE OF PAVEMENT. IN GRADED ROADS ONLY THE SEWER MARKER AND 4x4 SHALL BE REQUIRED
2. ALL SEWER MAINS SHALL BE TELEVISED ACCURATELY LOCATING WYE LOCATIONS. SEE STANDARD SPECIFICATION 496-3.
3. GRAPHIC ASBUILTS SHALL ACCURATELY LOCATE ALL WYES AND SERVICES. SEE STANDARD SPECIFICATION 496-2.
4. IN AREAS WHERE EXISTING DWELLINGS OR BUSINESSES ARE PRESENT TOP OF POST TO BE FLUSH WITH FINISH GRADE.

DATE REVISED: *MAY 1, 2000*			SECTION 498-2.1
Water & Sewer Department Utilities Division (352) 351-6772	CITY OF OCALA STANDARD DETAIL	SANITARY SEWER SERVICE	C
		SERVICE REFERENCING	SHT 1 OF 1

\\sharedept\Clust3\Water_sd-WS-Engineering\Water & Sewer Construction Manual\August 2012\Details\Sewer-Rev. August 2012\49821C 050100.dwg, 11/8/2016 1:53:35 PM

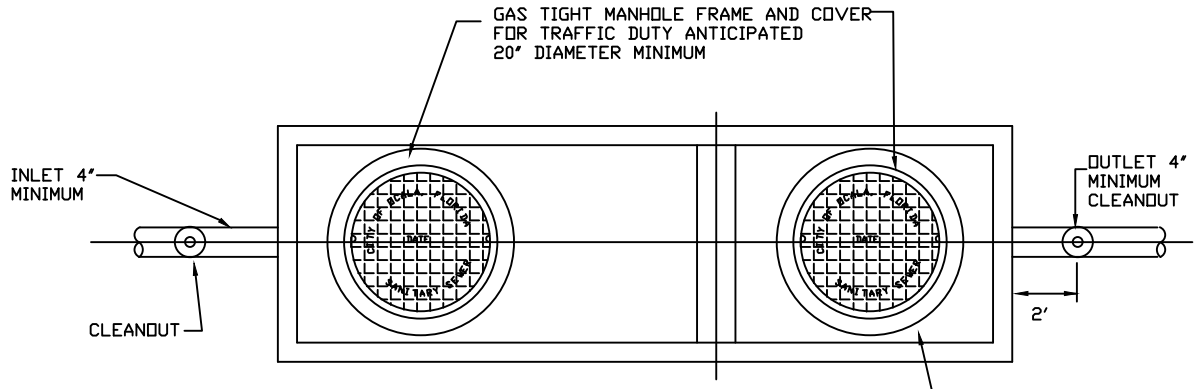

TOP VIEW

GREASE TRAP ELEVATIONS

A	B	C
103.75	101.58	101.08

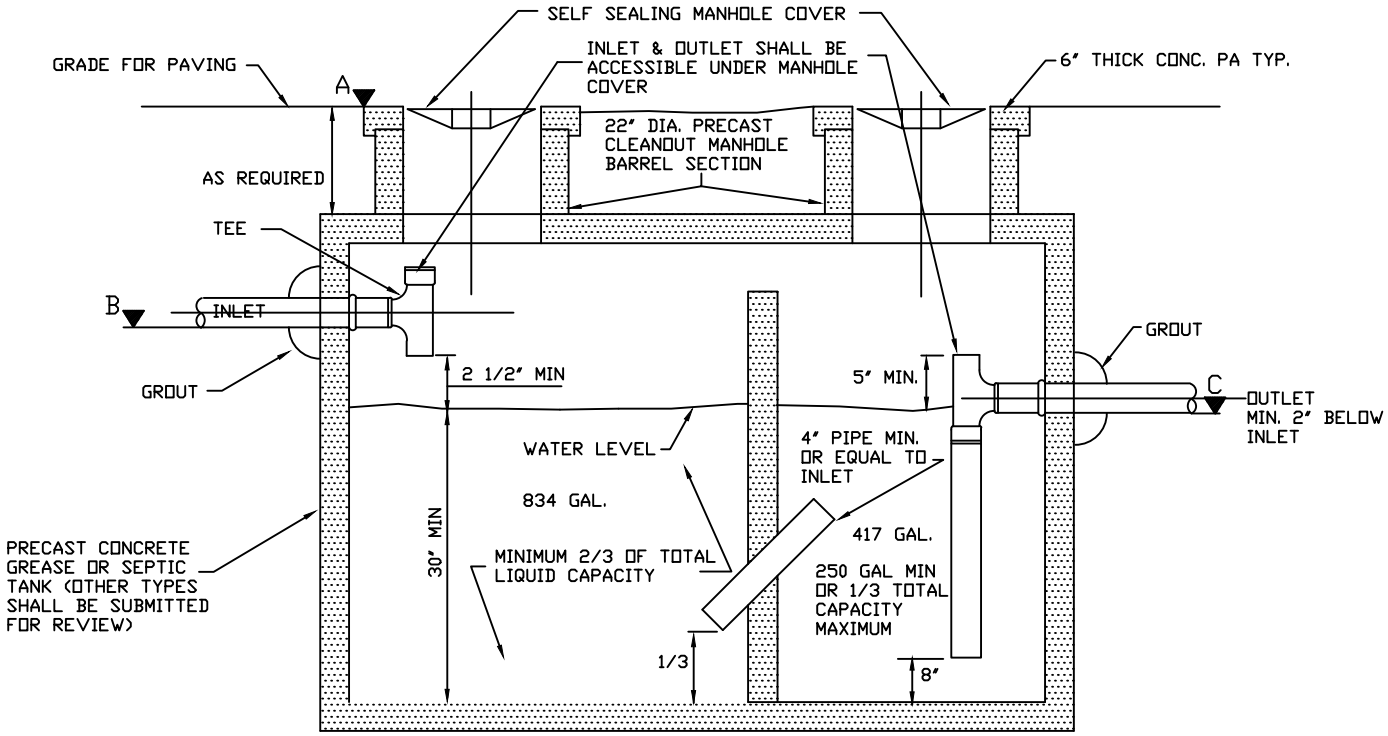

NOTE:
STRUCTURAL DESIGN OF GREASE TRAP SHALL BE IN ACCORDANCE WITH CHAPTER 10d-6 OF THE FLORIDA ADMINISTRATIVE CODES.

DESIGN CALCULATIONS

(S)x(GS)x(HR/12)x(LF)=EFFECTIVE CAPACITY OF GREASE TRAP IN GALLONS

(S) = NUMBER OF SEATS IN DINING AREA
(GS) = GALLONS OF WASTE WATER PER SEAT (USE 25 GALLONS)
(HR) = NUMBER OF HOURS ESTABLISHMENT IS OPEN
(LF) = LOADING FACTIOR-(2.0 WITH INTERSTATE HIGHWAYS, 1.5 OTHER FREEWAYS, 1.25 RECREATIONAL AREAS, 1.0 MAIN HIGHWAYS AND 0.75 OTHER HIGHWAYS)

SECTION

NOTE

1. ACCESS FOR MONITORING THE INLET AND OUTLET PIPE FITTINGS OR BAFFLES SHALL BE PROVIDED FROM MANHOLES. CLEANOUTS SHALL BE INSTALLED BEFORE THE FIRST GREASE INTERCEPTOR AND WITHIN TWO FEET AFTER THE LAST INTERCEPTOR IN THE SERIES.
2. GREASE INTERCEPTOR (OR INTERCEPTORS) SHALL BE DESIGNED TO PRODUCE A CLARIFIED EFFLUENT ACCEPTABLE TO CITY OF OCALA STANDARDS. FOR ADDITIONAL INFORMATION, CALL CITY WASTEWATER MONITORING SUPERVISOR AT 629-8421.

GREASE TRAP DETAIL (1250 GALLONS)

DATE REVISED: *FEBRUARY 26, 2008*			SECTION 498-2.2
Water & Sewer Department Utilities Division (352) 351-6772	CITY OF OCALA STANDARD DETAIL	GREASE OIL SEPARATOR	A SHT 1 OF 1

\\sharedept\Clust3\Water_sd-WS-Engineering\Water & Sewer Construction Manual\August 2012\Details\Sewer-Rev. August 2012\49822A 022608.dwg, 11/8/2016 1:53:42 PM

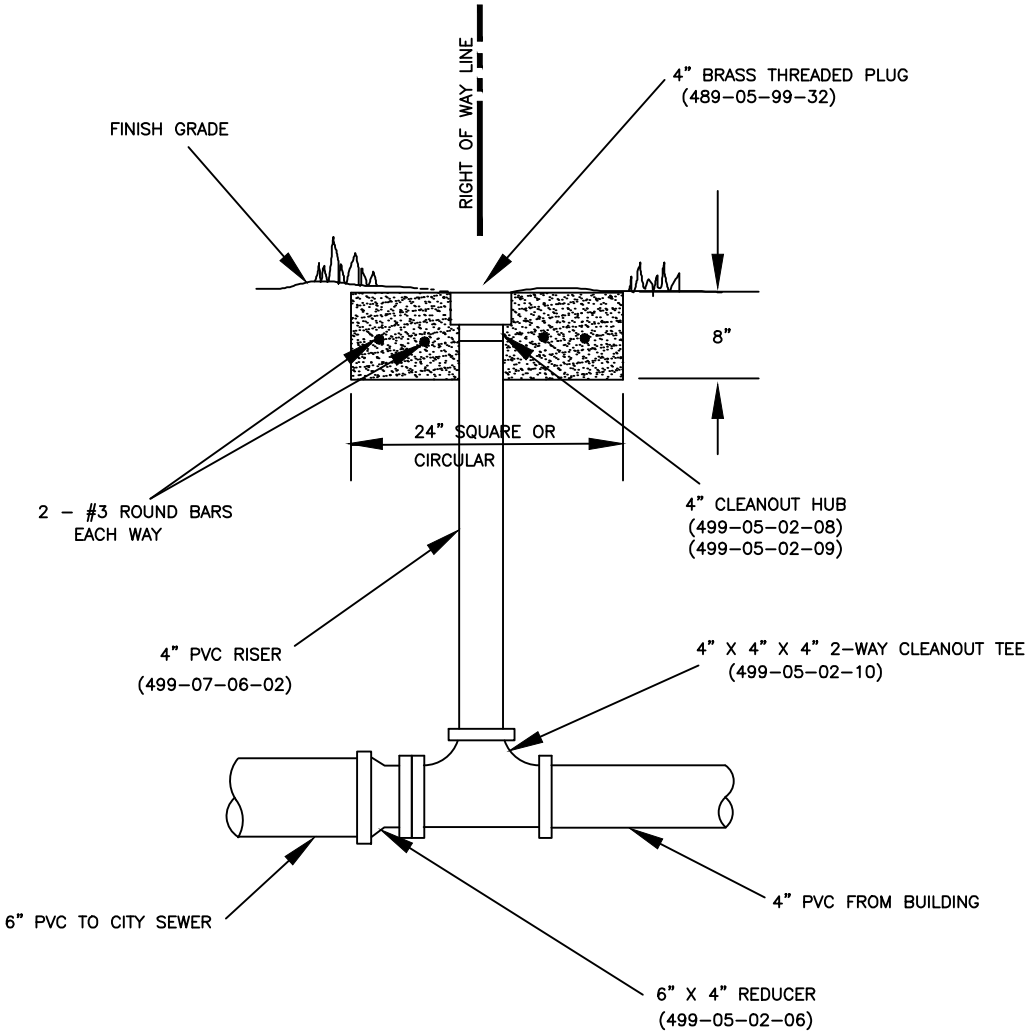

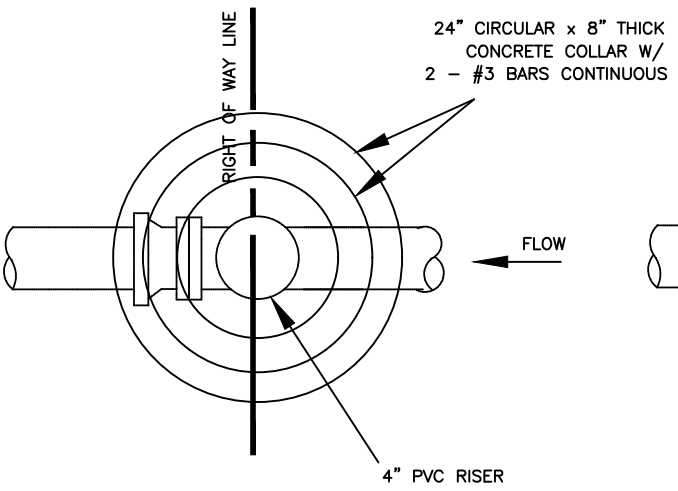

24" CIRCULAR

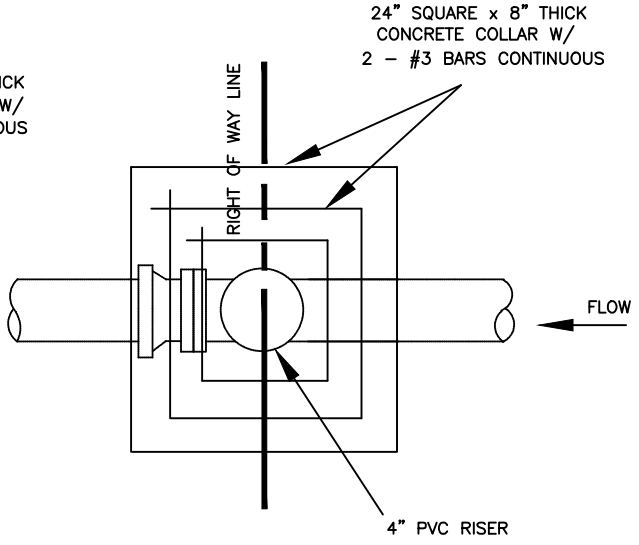

24" SQUARE

DATE REVISED: *AUGUST 14, 2012*			SECTION 498-2.2
Water & Sewer Department Utilities Division (352) 351-6772	CITY OF OCALA STANDARD DETAIL	SANITARY SEWER SERVICE	B
		RESIDENTIAL CLEANOUT	SHT 1 OF 1

\\sharedept\Clust3\Water_sd-WS-Engineering\Water & Sewer Construction Manual\August 2012\Details\Sewer-Rev. August 2012\49822B 081412.dwg, 11/8/2016 1:53:49 PM

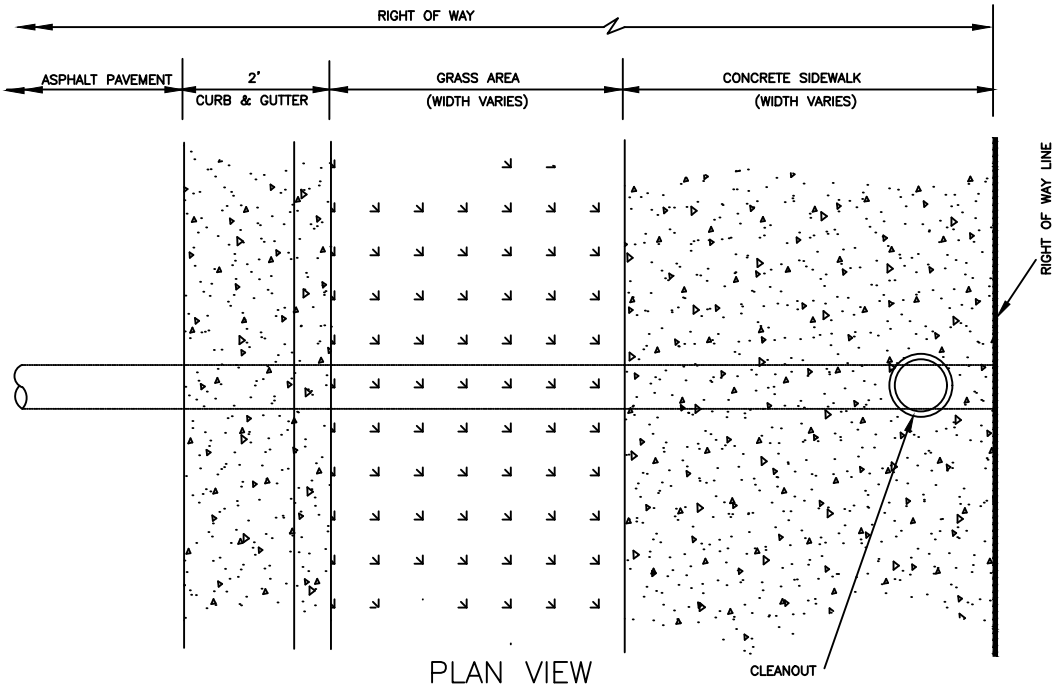

PLAN VIEW

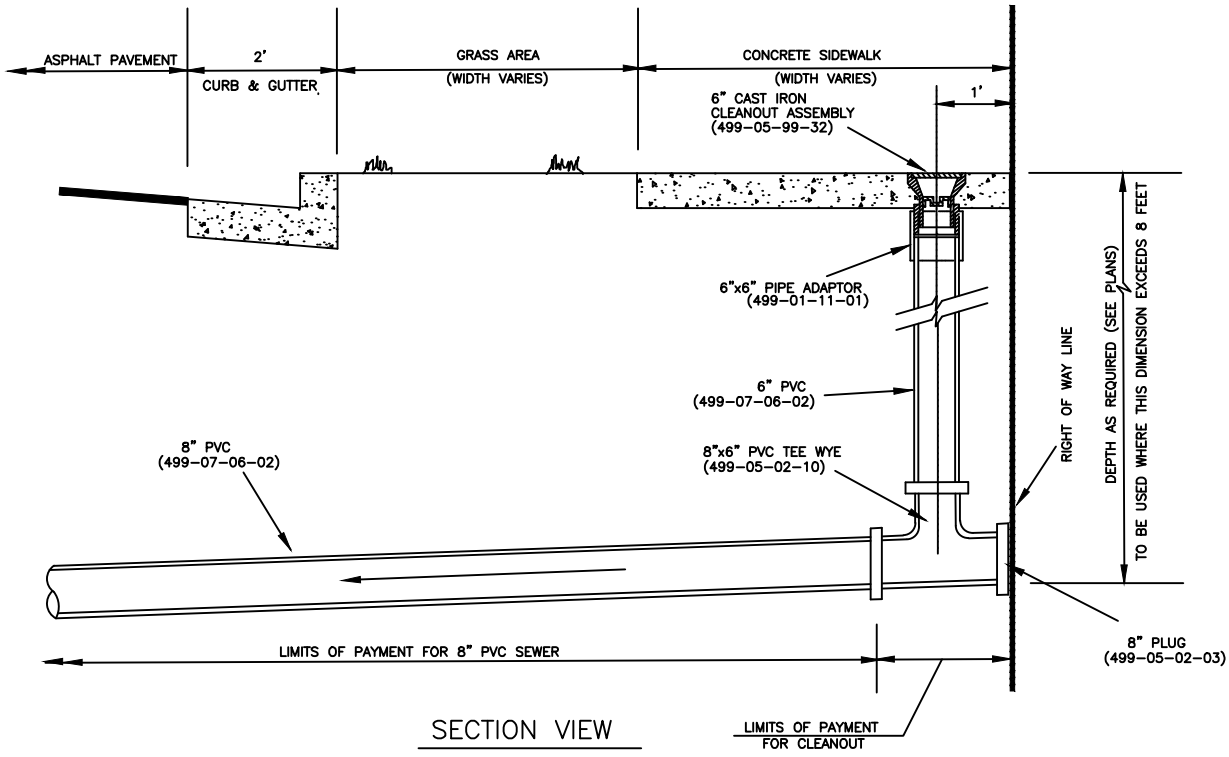

SECTION VIEW

NOTES

1. CLEANOUT INCLUDES 8"x6" TEE WYE, CLEANOUT ASSEMBLY, 6" PVC, PIPE ADAPTOR, 8" PLUG AND CONCRETE COLLAR (WHERE REQ).
2. IF NO SIDEWALK PLACE 24" SQ OR 24" DIA x 8" THICK SLAB WITH 2 – #3 REBAR EACH WAY

DATE REVISED: *AUGUST 14, 2012*			SECTION 498-2.2
Water & Sewer Department Utilities Division (352) 351-6772	CITY OF OCALA STANDARD DETAIL	SANITARY SEWER	C
		STUB W/ CLEANOUT	SHT 1 OF 1

\\sharedept\Clust3\Water_sd-WS-Engineering\Water & Sewer Construction Manual\August 2012\Details\Sewer-Rev. August 2012\49822C 081412.dwg, 11/8/2016 1:53:56 PM

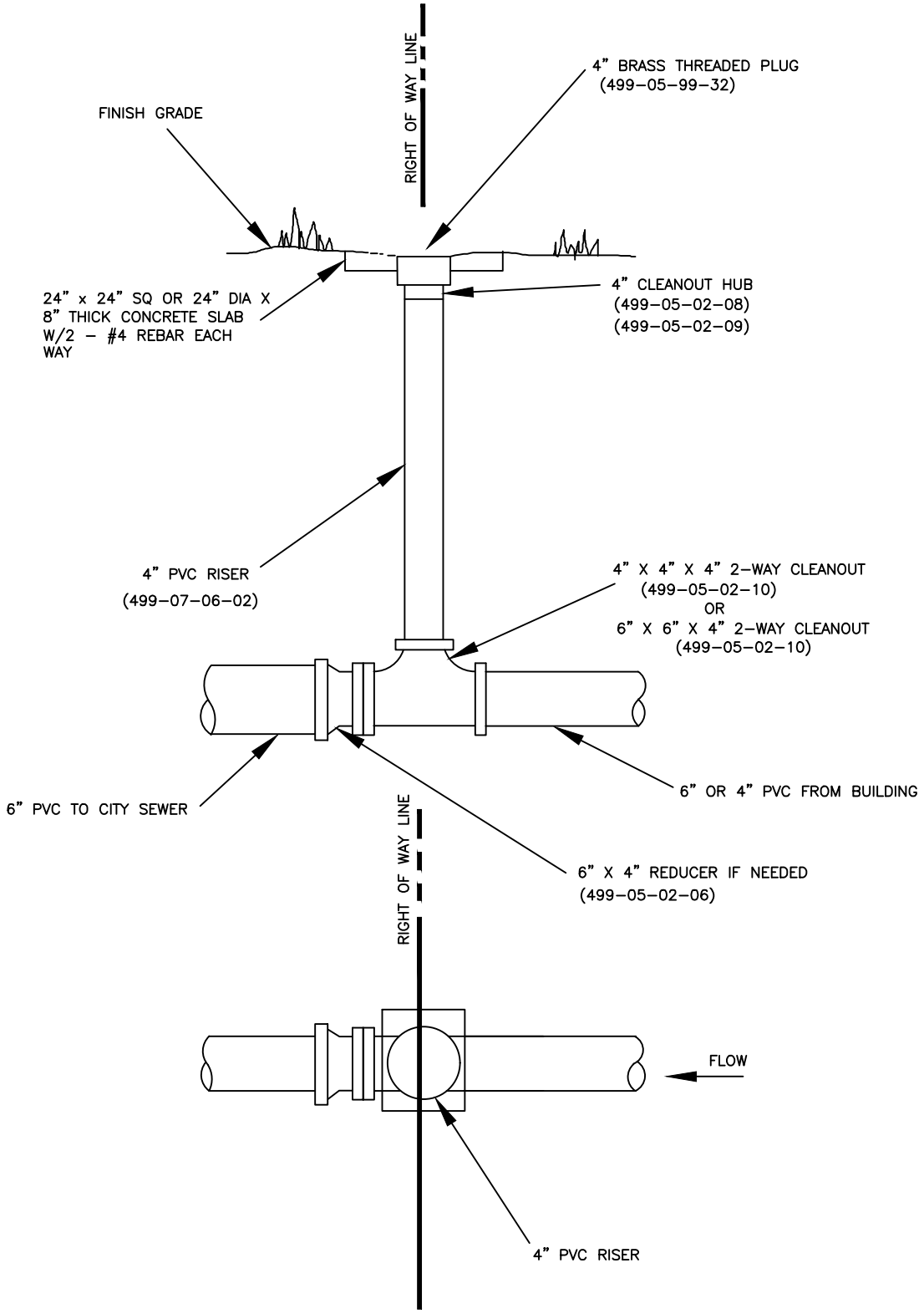

1. ALL CLEANOUTS ON SITE NEED TO HAVE CONCRETE PADS.

DATE REVISED: *DECEMBER 19, 2012*			SECTION 498-2.2
Water & Sewer Department Utilities Division (352) 351-6772	CITY OF OCALA STANDARD DETAIL	SANITARY SEWER SERVICE	D
		COMMERCIAL CLEANOUT	SHT 1 OF 1

\\sharedept\Clust3\Water_sd-WS-Engineering\Water & Sewer Construction Manual\August 2012\Details\Sewer-Rev. August 2012\49822D 121912.dwg, 11/8/2016 1:54:00 PM

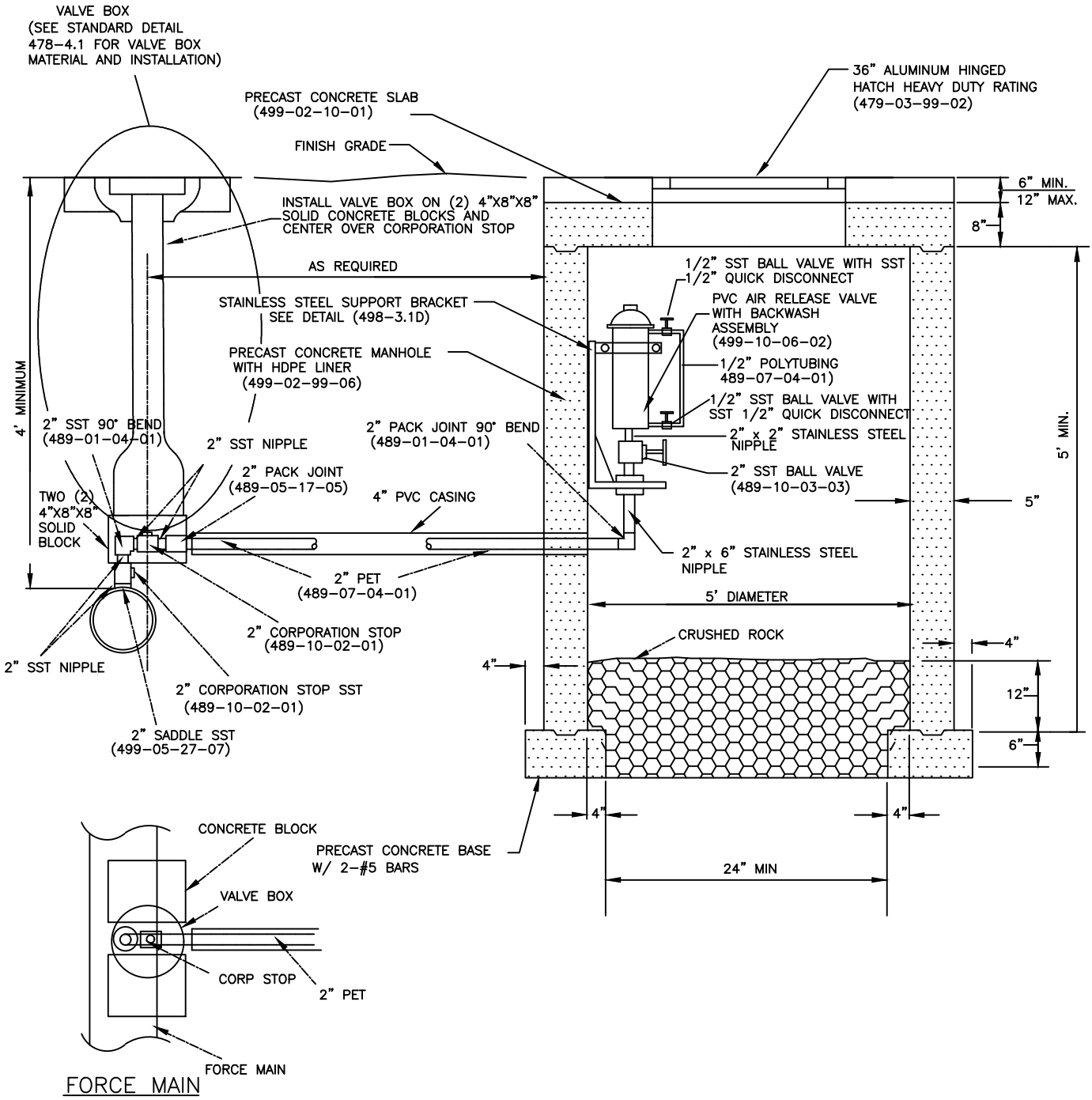

NOTES

1. MANHOLE WALLS SHALL BE LINED AS SPECIFIED IN SECTION 498-1.1.
2. USE STAINLESS STEEL FASTENERS TO SECURE ARV AND APPURTENANCES.

DATE REVISED: *AUGUST 14, 2012*			SECTION 498-3.1
Water & Sewer Department Utilities Division (352) 351-6772	CITY OF OCALA STANDARD DETAIL	AIR RELEASE VALVE ASSEMBLY DISCHARGE TO NEW MANHOLE	A SHT 1 OF 1

\\sharedept\Clust3\Water_sd-WS-Engineering\Water & Sewer Construction Manual\August 2012\Details\Sewer-Rev. August 2012\49831A 081412.dwg, 11/8/2016 1:54:07 PM

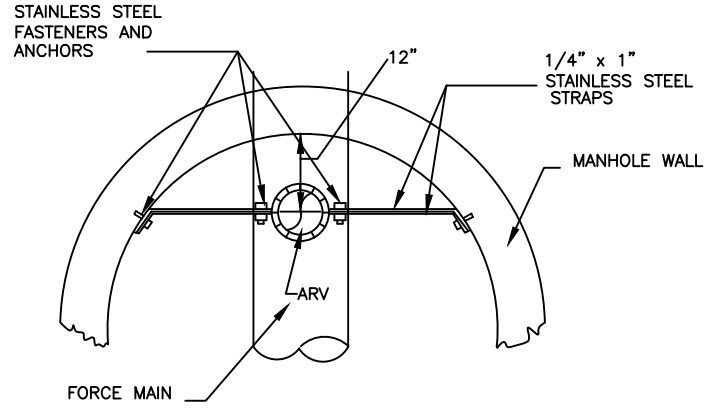

PLAN VIEW

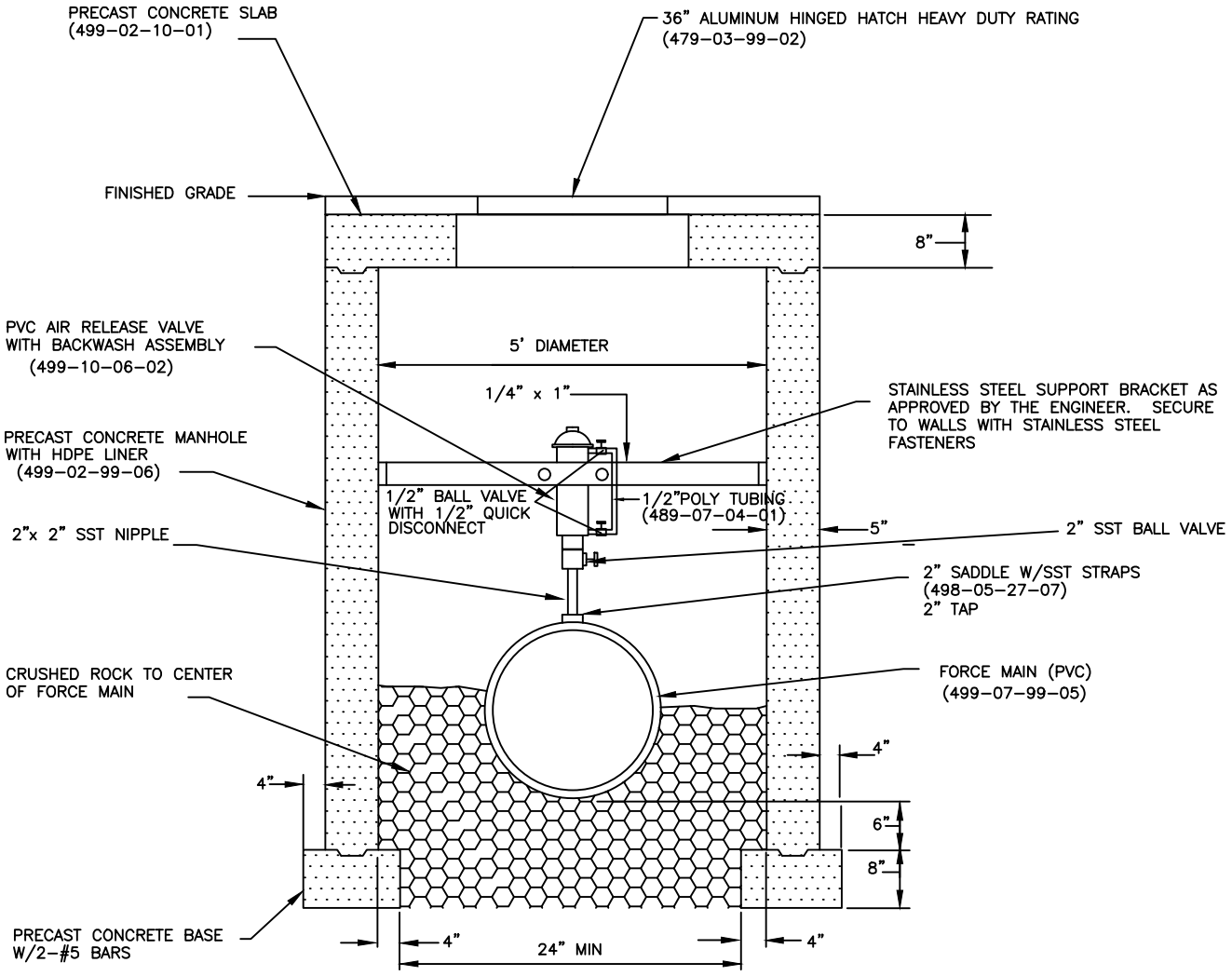

NOTES

1. MANHOLE WALLS SHALL BE LINED AS SPECIFIED IN SECION 498-1.1.
2. USE STAINLESS STEEL FASTENERS TO SECURE ARV AND APPURTENANCES.
3. FOR DIP FORCE MAINS COAT OUTSIDE EXPOSED AREA OF FORCE MAIN WITH EPOXY COATING (499-11-31-02).
4. LID TO READ SANITARY SEWER FORCE MAIN AIR RELEASE VALVE.

DATE REVISED: *AUGUST 14, 2012*			SECTION 498-3.1
Water & Sewer Department Utilities Division (352) 351-6772	CITY OF OCALA STANDARD DETAIL	AIR RELEASE VALVE ASSEMBLY OVER FORCE MAIN	B SHT 1 OF 1

\\sharedept\Clust3\Water_sd-WS-Engineering\Water & Sewer Construction Manual\August 2012\Details\Sewer-Rev. August 2012\49831B 081412.dwg, 11/8/2016 1:54:14 PM

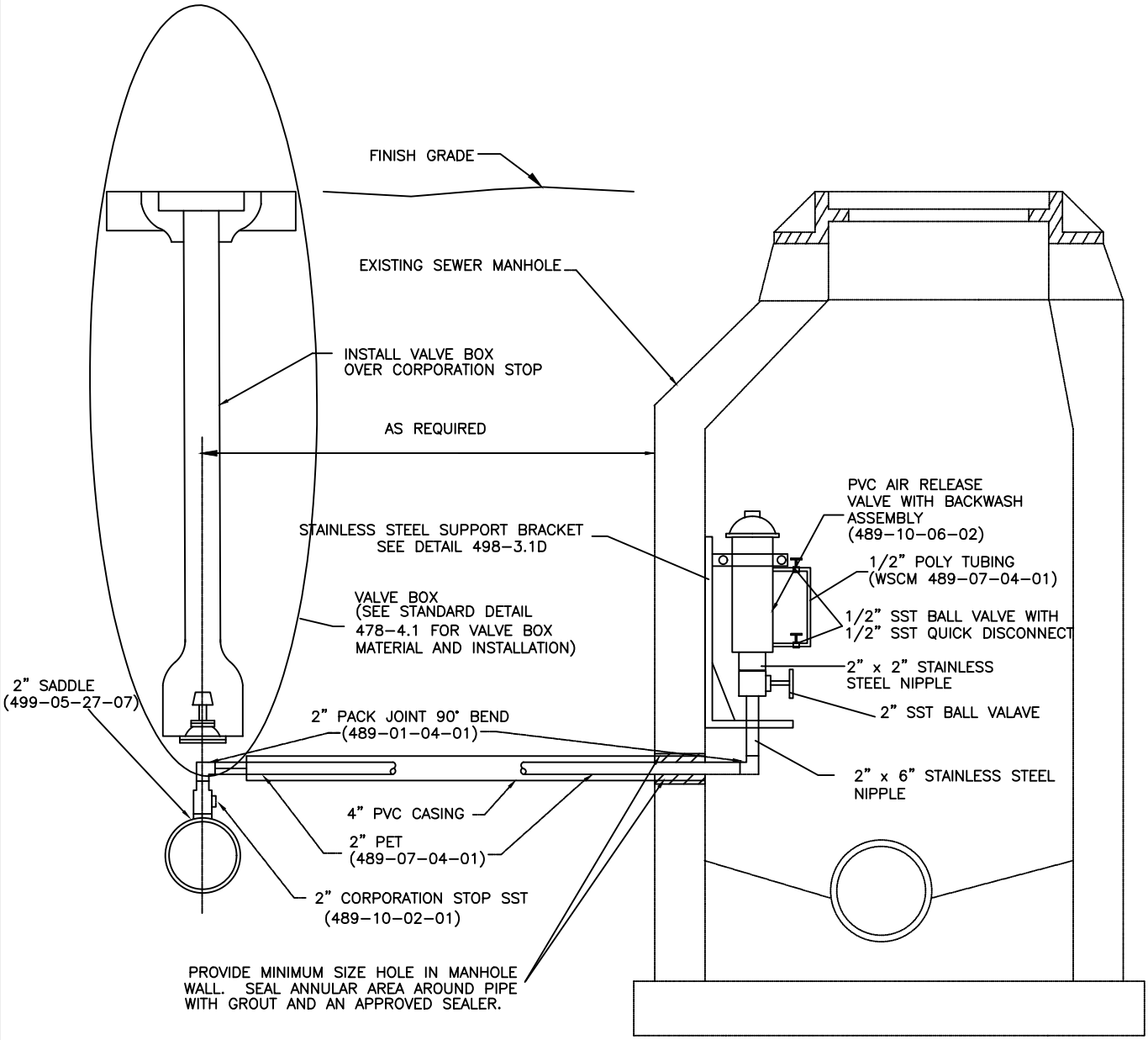

NOTES

1. MANHOLE WALLS SHALL BE LINED AS SPECIFIED IN SECTION 498-1.1.
2. USE STAINLESS STEEL FASTENERS TO SECURE A.R.V. AND APPURTENANES.
3. COAT INSIDE OF MANHOLE RIM & COVER & EXPOSED CONCRETE WITH COATING AS SPECIFIED IN 499-11-31-05, 499-11-31-06, 499-11-99-08.

DATE REVISED: *DECEMBER 19, 2012*			SECTION 498-3.1
Water & Sewer Department Utilities Division (352) 351-6772	CITY OF OCALA STANDARD DETAIL	AIR RELEASE VALVE ASSEMBLY DISCHARGE TO EXISTING MANHOLE	C SHT 1 OF 1

\\sharedept\Clust3\Water_sd-WS-Engineering\Water & Sewer Construction Manual\August 2012\Details\Sewer-Rev. August 2012\49831C 121912.dwg, 11/8/2016 1:54:19 PM

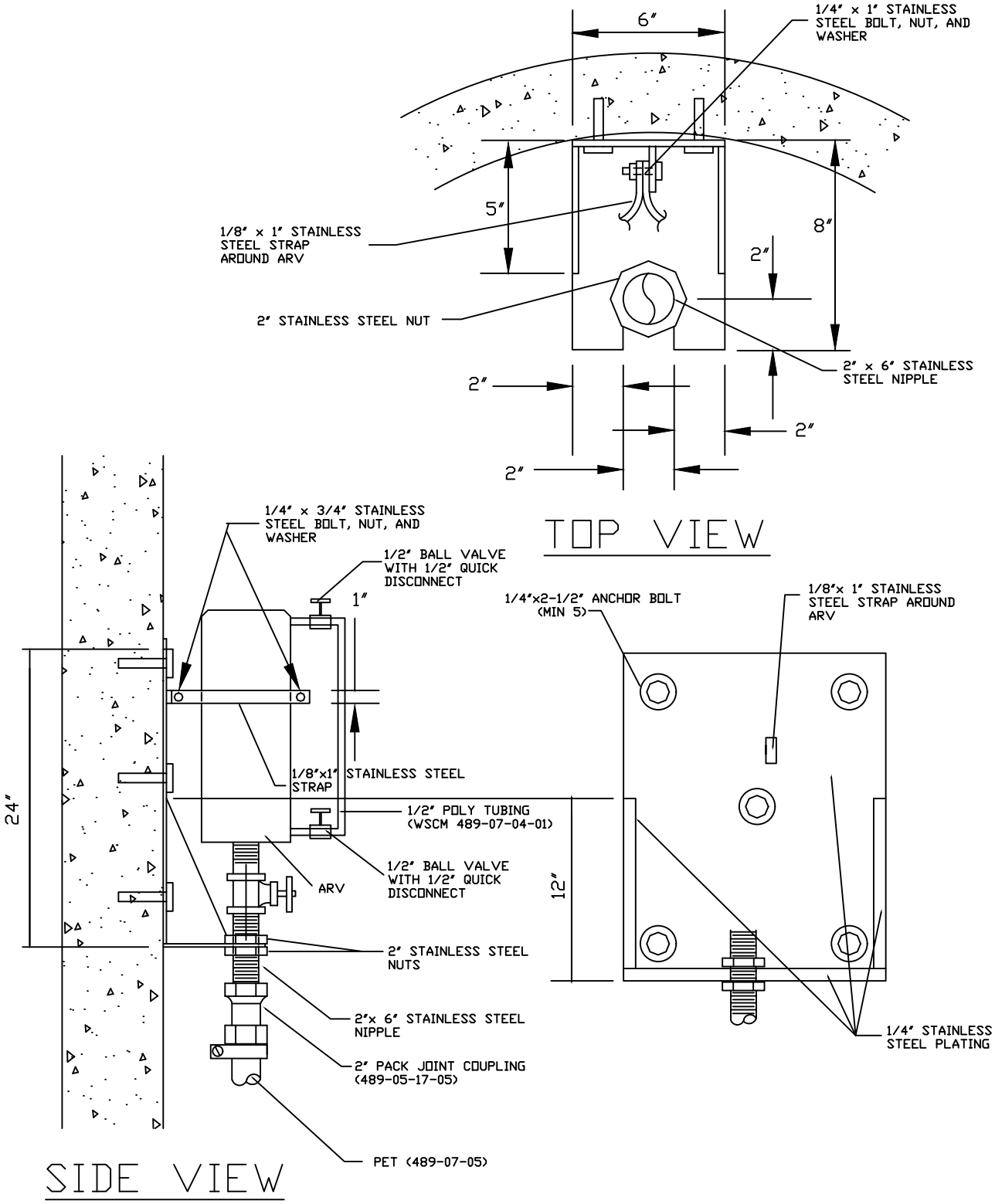

DATE REVISED: *JULY 10, 2000*			SECTION 498-3.1
Water & Sewer Department Utilities Division (352) 351-6772	CITY OF OCALA STANDARD DETAIL	AIR RELEASE VALVE ASSEMBLY SUPPORT BRACKET	D SHT 1 OF 1

\\sharedept\Clust3\Water_sd-WS-Engineering\Water & Sewer Construction Manual\August 2012\Details\Sewer-Rev. August 2012\49831D 071000.dwg, 11/8/2016 1:54:27 PM

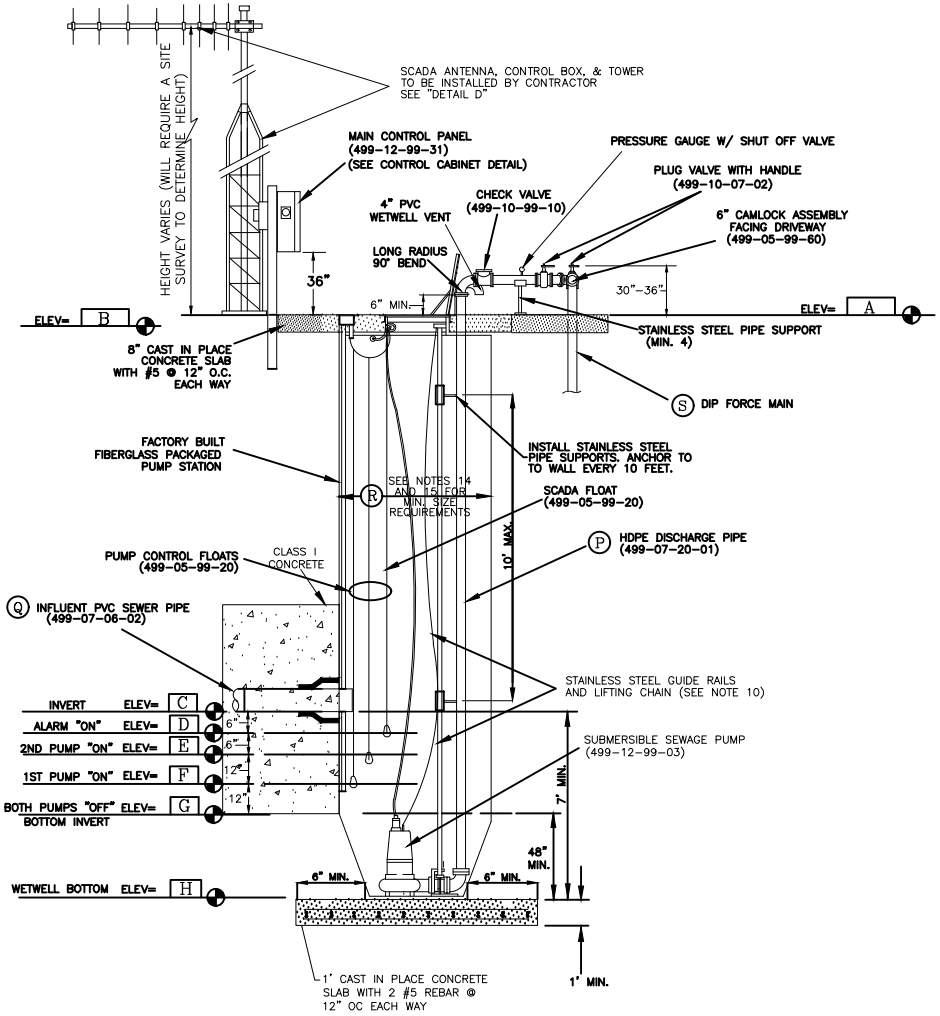

PROFILE VIEW

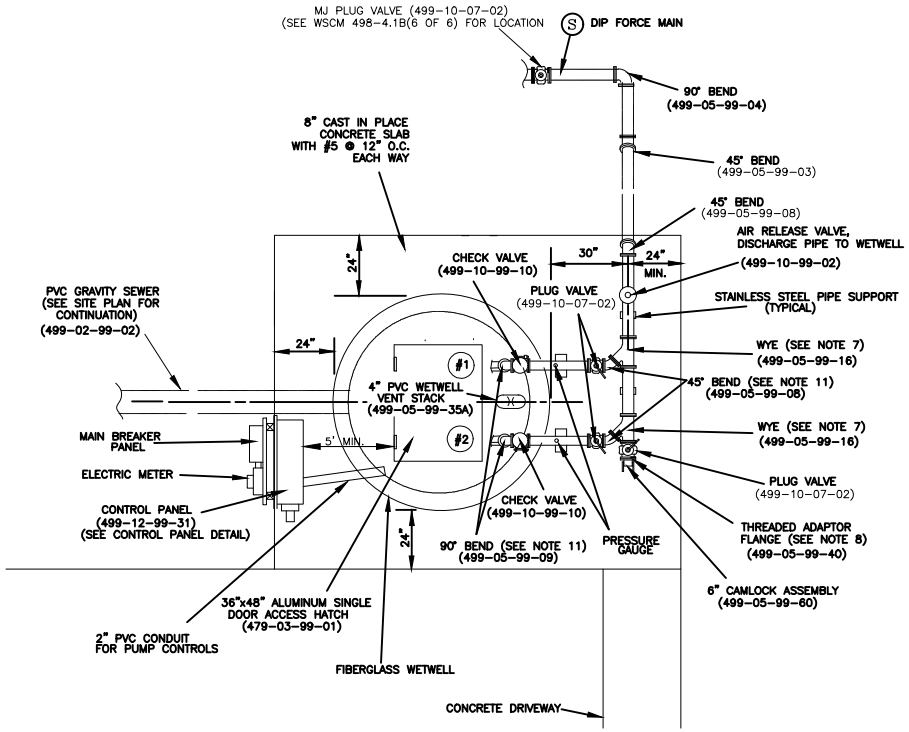

PLAN VIEW

NOTES

1. REFER TO PROJECT SPECIFICATIONS FOR ELEVATIONS A THRU H, DIAMETERS N THRU R AND PUMP SPECIFICATIONS.
2. REFER TO "TYPICAL SITE PLAN" (SHEET 3 of 3) OR PROJECT PLAN, WHEN PROVIDED, FOR ADDITIONAL REQUIREMENTS.
3. WET WELL, UNDER SIDE OF SLAB, AND ALL EXPOSED INTERIOR SURFACES AND JOINTS TO BE COATED OR LINED AS CALLED FOR IN THE PROJECT SPECIFICATIONS.
4. ALL ABOVEGROUND FITTINGS TO BE FLANGED.
5. FILL ANNULAR VOID BETWEEN PIPE AND RUBBER BOOT WITH GROUT AND FLUSH WITH THE STRUCTURE WALL.
6. BRANCH LINE OF WYE TO BE SAME DIAMETER AS DISCHARGE PIPE. MAIN LINE TO BEE SAME DIAMETER AS FORCE MAIN.
7. ADAPTOR FLANGE TO BE SAME DIAMETER AS FORCE MAIN AND FURNISHED WITH NPT THREADS FOR CAMLOCK ASSEMBLY.
8. ALL ABOVE GROUND PIPE, FITTINGS AND FASTENERS TO BE PAINTED AS SPECIFIED IN SECTION 499.11.99.04. ALL FITTINGS WITHIN SECTION SHALL BE STAINLESS STEEL. PIPING IN WETWELL SHALL BE COATED AS SPECIFIED IN SECTION 499-11-99-05.
9. GUIDE RAILS, LIFTING CHAINS AND OTHER PUMP APPURTENANCES TO BE FURNISHED BY PUMP MANUFACTURER OR DESIGNATED REPRESENTATIVE.
10. ALL PIPE FITTINGS AND PIPE TO BE FLANGED JOINT.
11. ALL ABOVEGROUND CONDUIT TO BE RIGID ALUMINUM OR PVC COATED STEEL CONDUIT. BELOW GROUND CONDUIT TO BE PVC.
12. WETWELL TO BE SUBJECTED TO A WATER TEST IN ACCORDANCE WITH SECTION 491.4.6.
13. CONTRACTOR SHALL CONDUCT A PRE-LIFT STATION CONSTRUCTION MEETING ON-SITE WITH CITY PERSONNEL FOR FINAL APPROVAL OF THE EQUIPMENT LOCATIONS.
14. FOR STATIONS BELOW 101 GPM, PROVIDE 6' WETWELLS MINIMUM.
15. FOR STATIONS BELOW 41 GPM, PROVIDE 5' WETWELLS MINIMUM.
16. CONTROL PANEL TO BE STAINLESS STEEL.
17. DROP CONNECTION SHALL BE ENCASED IN CLASS I CONCRETE.
18. WETWELL HATCH TO OPEN TO RISER PIPES.

DATE REVISED: *DECEMBER19,2012*			SECTION 498-4.1
Water & Sewer Department Utilities Division (352) 351-6772	CITY OF OCALA STANDARD DETAIL	SANITARY SEWER LIFT STATION SUBMERSIBLE INSTALLATION FOR LOW FLOW STATIONS	A SHT 1 OF 6

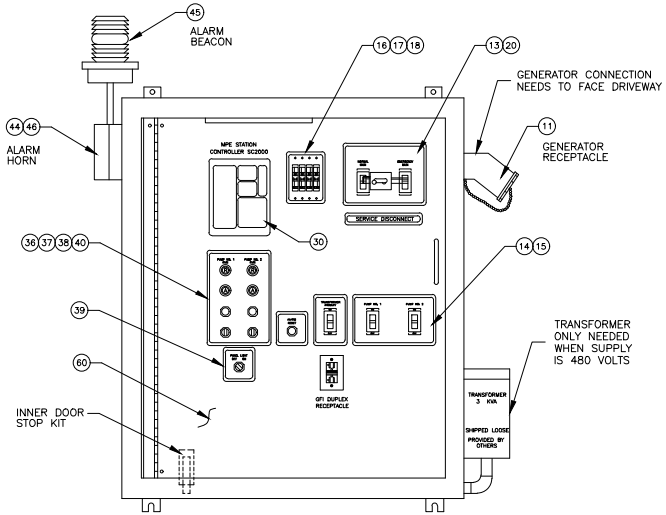

56 CABINET COMPONENTS AND LAYOUT

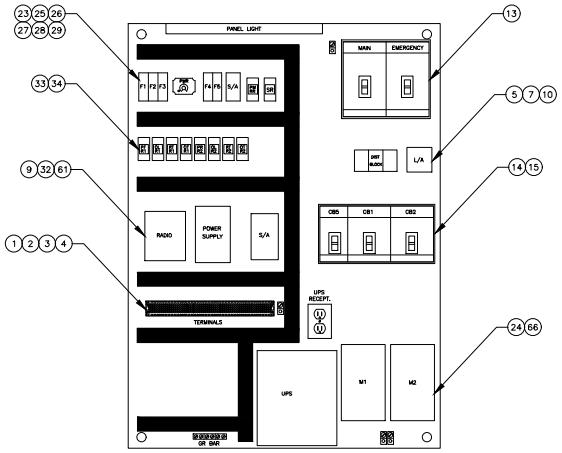

57 CABINET BACK PANEL

LEGEND

NUMERICAL LEGEND	SCHEMATIC LEGEND	DESCRIPTION	MANUFACTURER	PART NO.	QTY
1		TERMINAL,600VAC,35A,10 POLE	SIEMENS	8WA1 011-0DG21	5
2		TERMINAL MOUNTING RAIL, 35mm	SIEMENS	5ST11 46	1.25
3		TERMINAL MTG BRKT,30° ANGLE	SIEMENS	8WA7 46	2
4		TERMINAL END RETAINER	SIEMENS	8WA1 808	2
5		POWER DISTR.BLK.600VAC,175A,3 POLE	SQUARE D	9080-LBA362104	1
6		CLEAR PLEXIGLASS COVER FOR DISTR. BLK	SQUARE D	9080-LB23	1
7		LIGHTNING/SURGE, 480VAC, 3 PHASE, 3 WIRE	INTERMATIC	AG6503C	1
8		BRACKET FOR LIGHTNING /SURGE ARRESTOR	SQUARE D	QOSAMK	1
9		ARRESTOR,SURGE,24VDC	EDCO	DRS-030	1
10		ARRESTOR,SURGE,120V, 10KA	EDCO	HSP121BR-1RU	1
11		GENERATOR RECEPTACLE 600V, 100A, 4P,4W	RUSSELLSTOLL	JRS1044FR	1
12		ANGLE ADAPTER, 100A #/30 DEGREE ANGLE	RUSSELLSTOLL	JAAB10	1
13		CIRCUIT BREAKER, 480VAC, 3 POLE 70A, 18KAIC	SQUARE D	FAL34070	2
14		CIRCUIT BREAKER, 480VAC, 3 POLE 30A, 18KAIC	SQUARE D	FAL34030	2
15		CIRCUIT BREAKER, 480VAC, 2 POLE, 15A, 18KAIC	SQUARE D	FAL24015	1
16		CIRCUIT BREAKER, 120VAC, 1 POLE, 10A, 10KAIC	SQUARE D	QOU110	2
17		CIRCUIT BREAKER, 120VAC, 1 POLE, 15A, 10KAIC	SQUARE D	QOU115	1
18		CIRCUIT BREAKER, 120VAC, 1 POLE, 30A, 10KAIC	SQUARE D	QOU130	1
19		HAT-SECTION	PCP, INC.		3
20		MANUAL TRANSFER ASSEMBLY	PCP, INC.		1
21		LARGE MANUAL TRANSFER BLOCK (E FRAME)	FAB TECH	PH-20015	1
22		EQUIPMENT GROUND BAR KIT, 9PT.	SQUARE D	PK9GTA	1
23		PHASE MONITOR RELAY,480 VOLT, 3 PH (8 PIN)	DIVERSIFIED	SUA-440-ASA	1
24		STARTER, FVNR,NEMA SIZE 2, 13-27A	FURNAS	14FSF32AA	2
25		FUSE, SLO-BLO, TIME DELAY, 250VAC, 1A	BUSSMAN	BUSFNM1	1
26		FUSE, SLO-BLO, TIME DELAY, 250VAC, 4A	BUSSMAN	BUSFNM4	1
27		FUSE, SLO-BLO, TIME DELAY, 500VAC, 1A	BUSSMAN	BUSFNQ1	3
28		FUSE BLOCK, 1 POLE	BUSSMAN	BUSBM6031PQ	2
29		FUSE BLOCK, 3 POLE	BUSSMAN	BUSBM6033PQ	1
30		STATION CONTROLLER, 1-4 PUMPS, 120VAC	MPE	SC2000-0	1
31		BIRDCAGE, 0-10 PSI, 0-24 FEET,mA OUTPUT	BLUE RIBBON INDU	311ZBPN2GMCZFNHLM	1
32		POWER SUPPLY, 120VAC/12VDC, 1.7A	INTERNTIVAL POWER	IHB12-1.7	1
33		RELAY, MNIATURE, 120VAC	SQUARE D	8501 RS43V20	10
34		RELAY SOCKET	SQUARE D	8501 NR43	10
35		RELAY SOCKET, OCTAL, 8 PIN, 600VAC	CUSTOM CONNECTI	RB08-PC	1
36		PILOT LIGHT , LED 7/8" DIA , 125VAC, AMBER	IDI	2620QK3	2
37		PILOT LIGHT, LED, 7/8" DIA, 125VAC, RED	IDI	2620QK1	2
38		PUSHBUTTON, 22mm,NEMA 4X, FLH TYPE, BLACK	SQUARE D	ZB4BA2	3
39		SEL. Sw., 22mm NEMA 4X, 2POS. MAIN, OFF-ON	SQUARE D	ZB4BD2	1
40		SEL. Sw.; 22mm NEMA 4X, 3POS. MAIN, OFF-ON	SQUARE D	ZB4BD3	2
41		CONTACT BLOCK, (1) NORMALLY OPEN	SQUARE D	ZB4BZ101	3
42		CONTACT BLOCK, (1) NORMALLY CLOSED	SQUARE D	ZB4BZ102	2
43		CONTACT BLOCK, (2) NORMALLY OPEN	SQUARE D	ZB4BZ103	2
44		ALARM BELL, 4", 120VAC	EDWARDS	876-N5	1
45		ALARM STROBE , RED, 120VAC	EDWARDS	50R-N5-40WH	1
46		WEATHER PROOF BACK BOX FOR 4" BELL	EDWARDS	34B	1
47		1/2" x 6" SS NIPPLE	CAPITAL	6KR60	1
48		DUPLEX CONVENIENCE RECEP,20A, 125VAC	HUBBELL	CR20WHI	1
49		GFI DUPLEX CONVENIENCE RECEP.,15A, 120VAC	LEVITON	6599-W	1
50		HANDY BOX, 2" x 4"	THOMAS & BETTS	106-1/2-BW	1
51		RECEP. COVER, STANDARD DUPLEX, GALVAN FINISH			1
52		FLUORESCENT LIGHT FIX, 18" WDE, SGLE LIGHT	COOPER	3GA54	1
53		FLUORESCENT LAMP, 15 WATTS	COOPER	1V173	1
54		NAMEPLATES,LASER-SCREENED,(FOR BREAKERS)	PCP, INC.		2
55		NAMEPLATES, LASER-SCREENED, (FOR CONTROL)	PCP, INC.		2
56		ENCLOSURE, NEMA 3R, SS, 48"H x 36"W x 12"D	SCHAEFER	SPRCH-483612SS	1
57		BACK PANEL, PAINTED WHITE STEEL, 12 GAUGE	SCHAEFER	SPP-4836	1
58		3pt. PADLOCKABLE LATCH KIT (medium)	SCHAEFER	LHSP-M	1
59		DOOR STOP KIT, 90° (OUTDOOR), N4-12-T304SS	FAB TECH	NH-45010	1
60		HINGED INNERDOOR, ALUMINUM	PCP, INC.	HID-4836	1
61		MDS SPREAD SPECTRUM RADIO	ADAPTIVE BROADB	MDS 9810	1
62		POLYPHASER SURGE PROTECTOR FOR ANTENNA	POLYPHASOR	IS-50NXC2	1
63		MAXRAD 9db YAGI ANTENNA (REMOTES)	MAX RAD	MYA9306	1
64		3" CABLE (RADIO TO SURGE PROTECTION)	TEDI	CA-LMR195	1
65		100' CABLE (SURGE PROTECTION TO ANT)	TEDI	LMR400,2N-TYPE MALE	1
66		UPS	TRIPP-LITE	BCPR0600	1
67		SERIAL CABLE (RADIO TO COMPUTER-REQUIRED)			1

NOTE: MATERIALS TO BE AS SPECIFIED. SUBSTITUTIONS MUST BE APPROVED BY THE ENGINEER. RELAYS, PHASE MONITOR (3 PHASE) AND FUSES ARE TO BE SUPPLIED (120V) ON LEFT OF RELAY. PHASE MONITOR AND FUSE HOLDER. SUPPLY WIRE MUST ENTER ON LEFT SIDE OF RELAY TO OPERATE COIL OF RELAY. PHASE MONITOR 3 PHASES TO ENTER ON LEFT. FUSE HOLDERS TO BE FED ON LEFT.

FOR 480/277V SERVICES PROVIDE STEP DOWN TRANSFORMER IN SEPARATE SST PANEL, NEMA 3R

NOTE: NO TOP PENETRATIONS IN METER/MAIN/CONTROLCABINET/ETC.

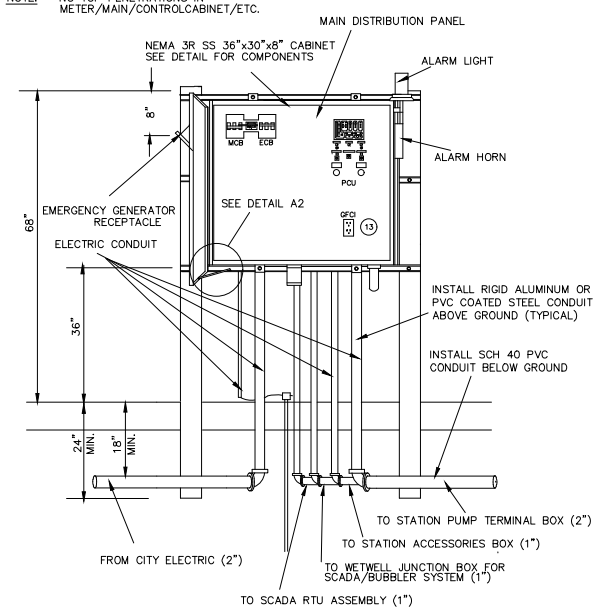

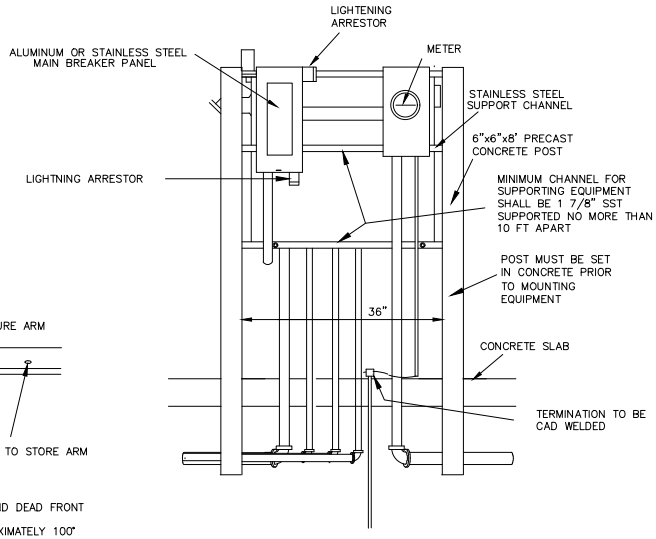

DETAIL A

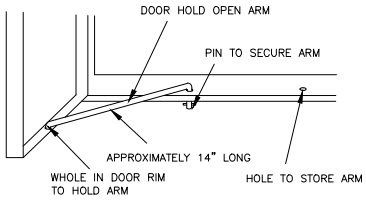

1. FURNISH HOLD OPEN ARMS FOR DOOR FRONT AND DEAD FRONT
2. OUTER DOOR SHOULD BE HELD OPEN AT APPROXIMATELY 100° TO CABINET. INNER DOOR TO BE APPROXIMATELY 90°.
3. BRING ALL I/O FROM MPE TO TERMINAL STRIP FOR FUTURE USE.
4. PROVIDE SINGLE 120 VOLT OUTLET FOR GENERATOR BATTERY CHARGER AND A STANDARD TWIST LOCK FOR THE START CIRCUIT ON GENERATOR.
5. ANCHORS, BOLTS, FASTENERS FURNISHED AS NECESSARY FOR INSTALLATION OF WORK. UNLESS OTHERWISE INDICATED, USE 316 STAINLESS STEEL.

DETAIL A2

DATE REVISED: *DECEMBER18,2012*			SECTION 498-4.1
Water & Sewer Department Utilities Division (352) 351-6772	CITY OF OCALA STANDARD DETAIL	SANITARY SEWER LIFT STATION	A
		SUBMERSIBLE INSTALLATION	SHT 2 OF 6

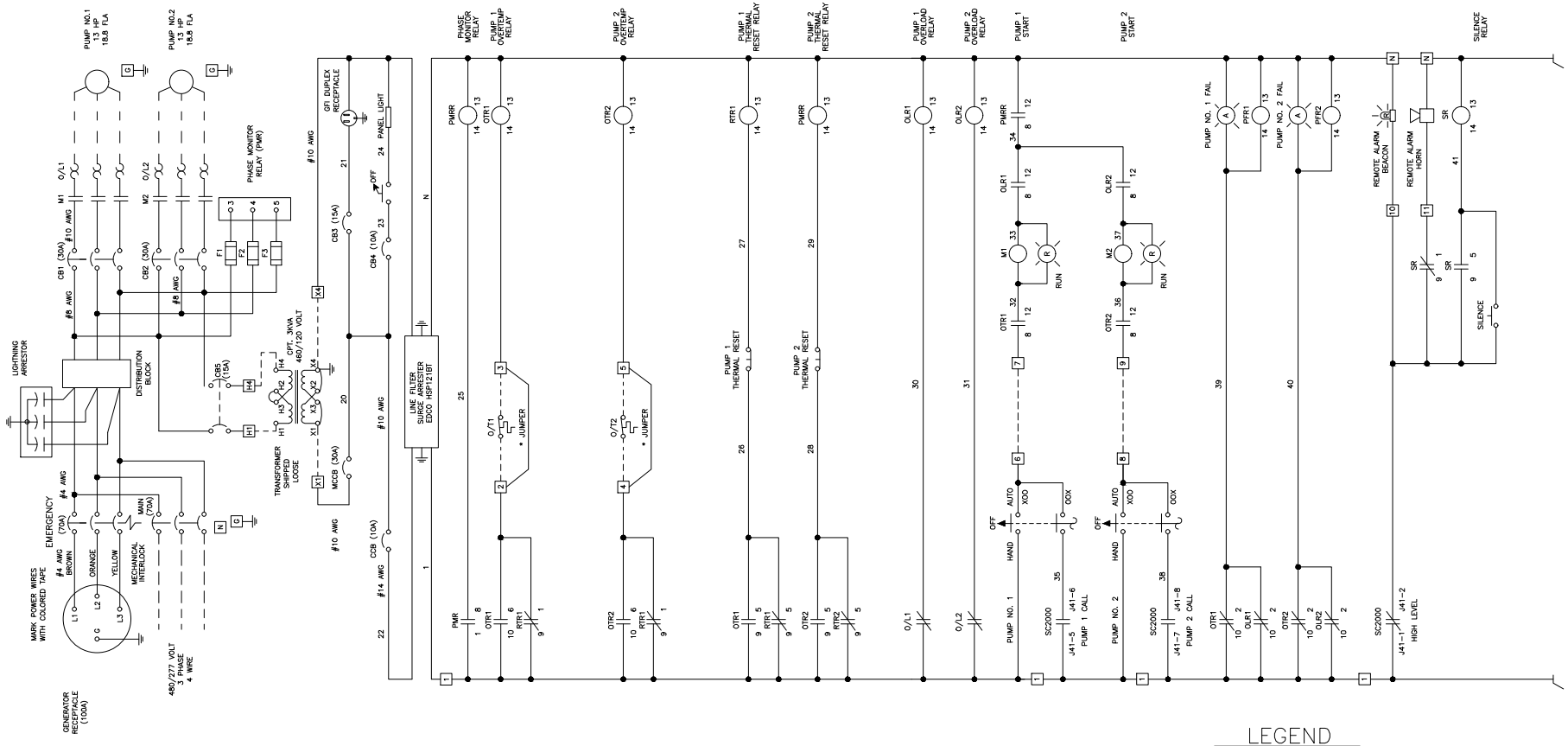

LEGEND

CB1	CONTROL BREAKER MAIN
CB2	CONTROL BREAKER TWO
CB3	CONTROL BREAKER THREE
CB4	CONTROL BREAKER FOUR
MCB1	MOTOR CIRCUIT BREAKER ONE
MCB2	MOTOR CIRCUIT BREAKER TWO
M1	MOTOR STARTER ONE/PUMP #1
M2	MOTOR STARTER TWO/PUMP #2
H	HAND OPERATION
O	OFF
A	AUTOMATIC
R8	PHASE LOSS MONITOR
P1	DIGITAL CONTROL/MOTOR #1
P2	DIGITAL CONTROL/MOTOR #2
SS1	SELECTOR SWITCH/MOTOR #1
SS2	SELECTOR SWITCH/MOTOR #2
GRD	GROUND
P.B.	PUSH BUTTON
A	PHASE 1 (A) OF LINE–BLACK
B	PHASE 2 (B) OF LINE–RED
C	PHASE 3 (C) OF LINE–BLUE
NUETRAL	NEUTRAL OF SERVICE LINE
PLM	PHASE LOSS MONITOR
AUX	AUXILARY TERMINAL SCREW ON LINE TOP OF MOTOR STARTER "A" PHASE
L1–5	CIRCUIT BREAKER TWO/LINE AFTER PHASE LOSS
$	CIRCUIT SWITCH LEVITON WALL TYPE
TSR	THERMAL SWITCH RELAY
N.O.	NORMALLY OPEN

LIGHT
ALARM HORN
GROUND FAULT CIRCUIT INTERUPTOR
MOTOR STARTER COIL
PUSH BUTTON – MOMENTARY
TRANSFORMER
FUSE
FLOAT SWITCH BALL
MULTIPLE WIRES AT SAME TERMINATION
DIGITAL CONTROL RELAY
TEMPERATURE SENSOR
LOCK OUT SLIDE SWITCH

DATE REVISED: *AUGUST 14, 2012*	PANEL SCHEMATIC–208/120V 3 PH		SECTION 498–4.1
Water & Sewer Department Utilities Division (352) 351–6772	CITY OF OCALA STANDARD DETAIL	SANITARY SEWER LIFT STATION SUBMERSIBLE INSTALLATION	A SHT 3 OF 6

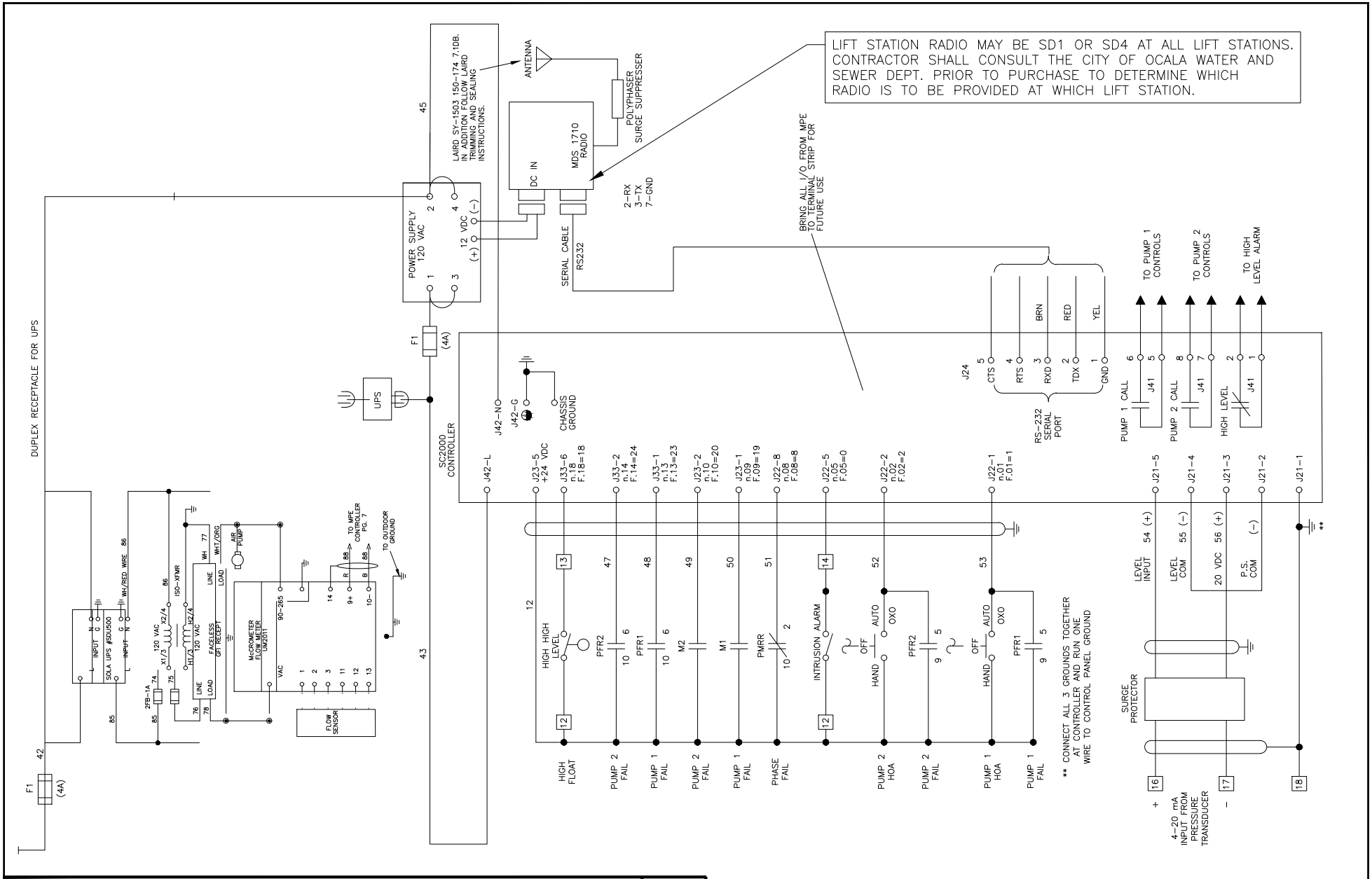

DATE REVISED: *DECEMBER 21, 2015*	PANEL SCHEMATIC 208/120V 3 PHASE		SECTION 498-4.1
Water & Sewer Department Utilities Division (352) 351-6772	CITY OF OCALA STANDARD DETAIL	SANITARY SEWER LIFT STATION SUBMERSIBLE INSTALLATION FOR LOW FLOW STATIONS	A SHT 4 OF 6

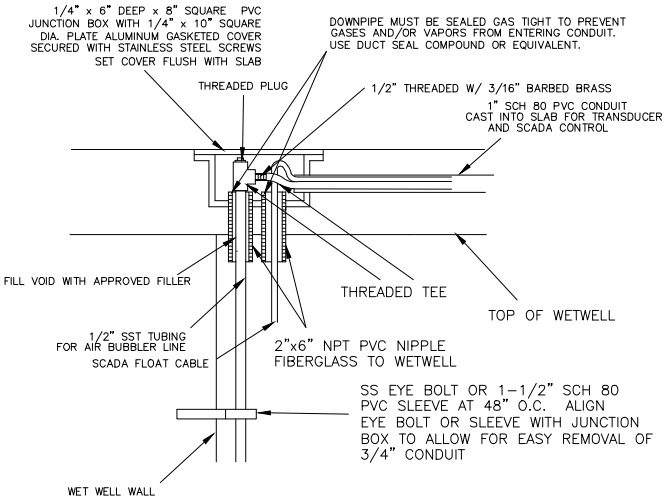

DETAIL A

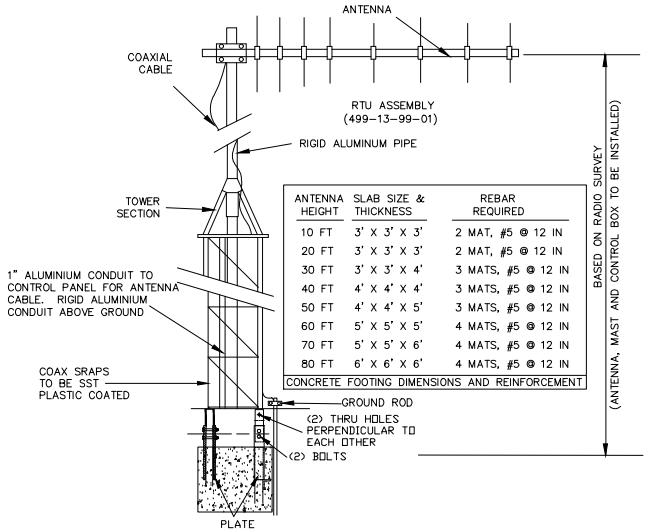

ANTENNA HEIGHT	SLAB SIZE & THICKNESS	REBAR REQUIRED
10 FT	3' X 3' X 3'	2 MAT, #5 @ 12 IN
20 FT	3' X 3' X 3'	2 MAT, #5 @ 12 IN
30 FT	3' X 3' X 4'	3 MATS, #5 @ 12 IN
40 FT	4' X 4' X 4'	3 MATS, #5 @ 12 IN
50 FT	4' X 4' X 5'	3 MATS, #5 @ 12 IN
60 FT	5' X 5' X 5'	4 MATS, #5 @ 12 IN
70 FT	5' X 5' X 6'	4 MATS, #5 @ 12 IN
80 FT	6' X 6' X 6'	4 MATS, #5 @ 12 IN

CONCRETE FOOTING DIMENSIONS AND REINFORCEMENT

DETAIL C

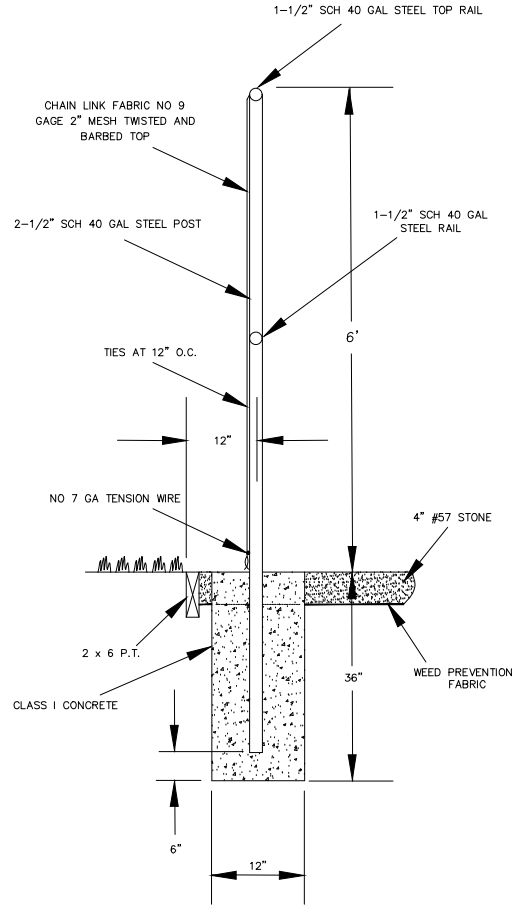

DETAIL D

CORNER POSTS TO BE 3" DIA.
TRUSS RODS INSTALLED AT CORNERS
CENTER RAIL INSTALLED AT CORNERS

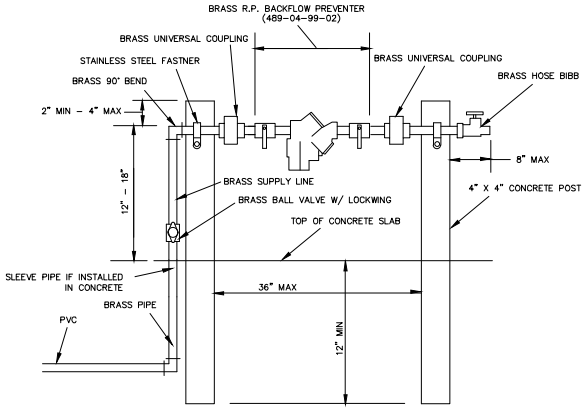

DETAIL B

DATE REVISED: *AUGUST 14, 2012*			SECTION 498-4.1
Water & Sewer Department Utilities Division (352) 351-6772	CITY OF OCALA STANDARD DETAIL	SANITARY SEWER LIFT STATION	A
		SUBMERSIBLE INSTALLATION	SHT 5 OF 6

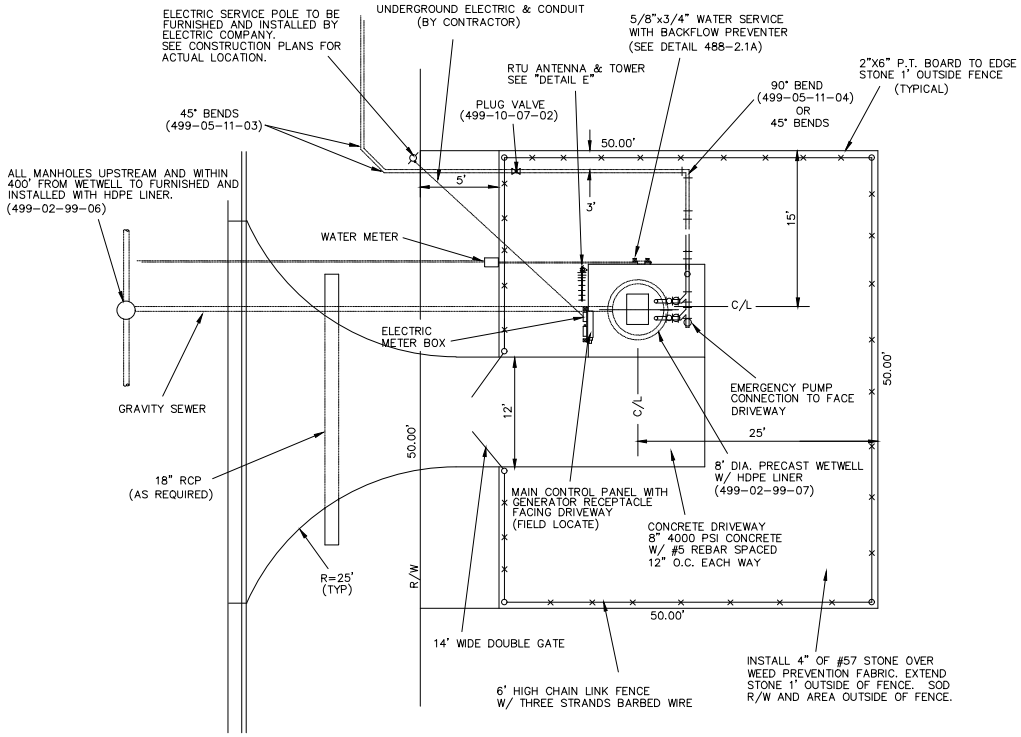

TYPICAL SITE PLAN FOR LIFT STATION

LIFT STATION DATA							
PUMP SPECIFICATIONS		(*) ELEVATIONS			(*) DIAMETERS		
PUMP MANUF.		TOP OF SLAB	A		PUMP DISCHARGE	P	
PUMP MODEL #		FINISH GRADE	B		INFLUENT PIPE	Q	
PUMP SIZE		INFLUENT INVERT	C		WETWELL	R	
GPM		ALARM ON	D		FORCE MAIN	S	
TDH		2ND PUMP ON	E				
HP		1ST PUMP ON	F				
RPM		BOTH PUMPS OFF	G				
IMPELLER		WETWELL BOTTOM	H				
POWER		F.M. DISCHARGE	I				
		F.M. HIGH POINT	J				
(*) REFER TO CITY OF OCALA WATER AND SANITARY SEWER CONSTRUCTION MANUAL, 498-4.1B FOR LIFT STATION DETAILED DRAWING							

TYPICAL LIFT STATION DATA TABLE

DATE REVISED: *AUGUST 14, 2012*			SECTION 498-4.1
Water & Sewer Department Utilities Division (352) 351-6772	CITY OF OCALA STANDARD DETAIL	SANITARY SEWER LIFT STATION	A
		SUBMERSIBLE INSTALLATION	SHT 6 OF 6

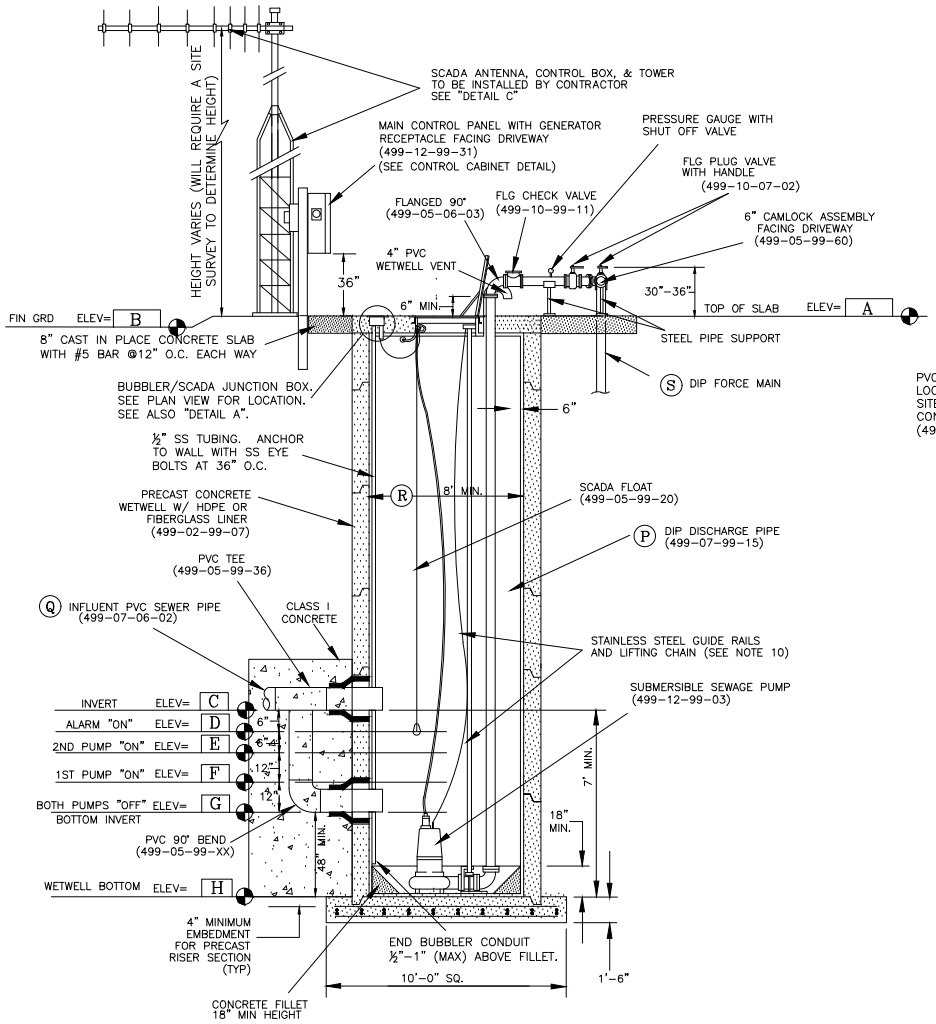

PROFILE VIEW

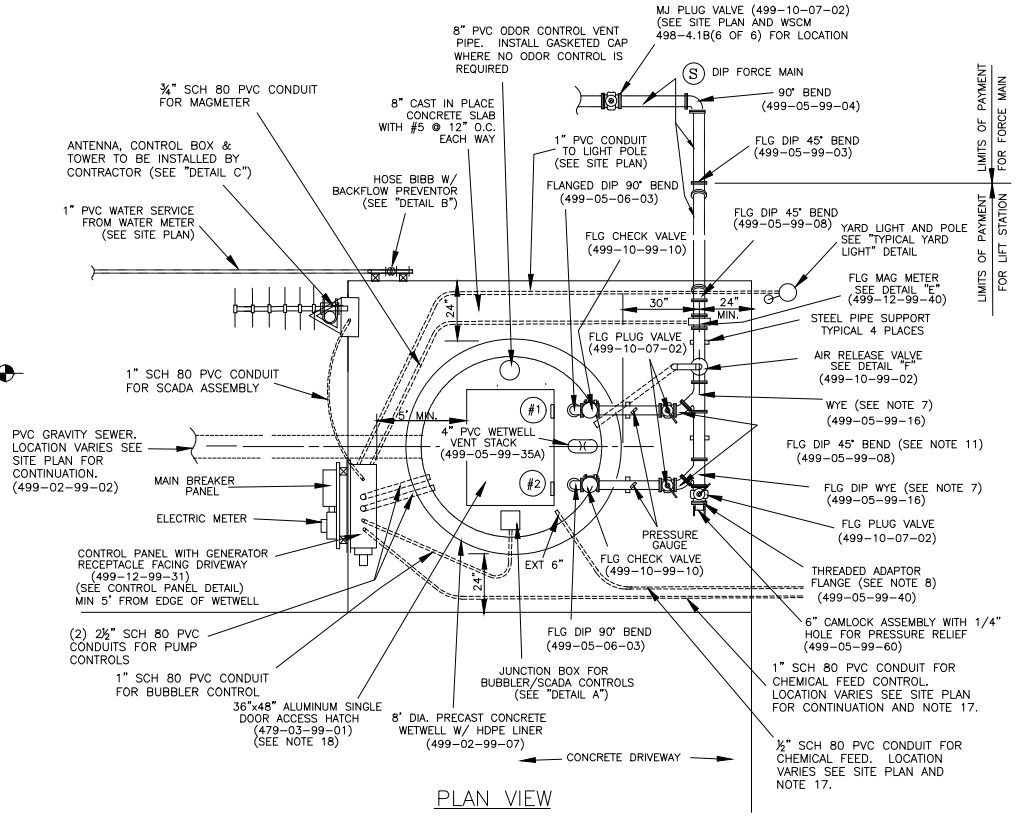

PLAN VIEW

NOTES

1. REFER TO PROJECT SPECIFICATIONS FOR ELEVATIONS A THRU H, DIAMTERS P THRU S AND PUMP SPECIFICATIONS.
2. REFER TO "TYPICAL SITE PLAN" (SHEET 6 of 6) OR PROJECT PLAN, WHEN PROVIDED, FOR ADDITIONAL REQUIREMENTS.
3. WET WELL, UNDER SIDE OF SLAB, AND ALL EXPOSED INTERIOR SURFACES AND JOINTS TO BE COATED OR LINED AS CALLED FOR IN THE PROJECT SPECIFICATIONS.
4. ALL ABOVEGROUND FITTINGS TO BE FLANGED.
5. USE NON-SHRINK GROUT WHEN ASSEMBLING PRECAST SECTIONS IN LIEU OF PREMOLDED PLASTIC JOINT SEALER.
6. FILL ANNULAR VOID BETWEEN PIPE AND RUBBER BOOT WITH GROUT AND FLUSH WITH THE STRUCTURE WALL.
7. BRANCH LINE OF WYE TO BE SAME DIAMETER AS DISCHARGE PIPE. MAIN LINE TO BE SAME DIAMETER AS FORCE MAIN.
8. ADAPTOR FLANGE TO BE SAME DIAMETER AS FORCE MAIN AND FURNISHED WITH NPT THREADS FOR CAMLOCK ASSEMBLY.
9. ALL ABOVE GROUND PIPE, FITTINGS AND FASTENERS TO BE PAINTED AS SPECIFIED IN SECTION 499-11-99-04. ALL FITTINGS WITHIN WETWELL SHALL BE STAINLESS STEEL. ALL PIPING 3" OR LARGER IN WETWELL AND ABOVE GROUND TO BE COATED AS SPECIFIED IN SECTION 499-11-99-05. PIPING 3" OR LARGER TO BE RED PRIMERED AND EPOXY COATED. PRIMER TO BE "FACTORY APPLIED" COATING.
10. GUIDE RAILS, LIFTING CHAINS AND OTHER PUMP APPURTENANCES TO BE FURNISHED BY PUMP MANUFACTURER OR DESIGNATED REPRESENTATIVE.
11. ALL PIPE FITTINGS AND PIPE TO BE FLANGED JOINT.
12. ALL ABOVEGROUND CONDUIT TO BE RIGID ALUMINUM OR PVC COATED STEEL CONDUIT. BELOW GROUND CONDUIT TO BE PVC.
13. WETWELL TO BE SUBJECTED TO A WATER TEST IN ACCORDANCE WITH SECTION 491.4.6.
14. CONTRACTOR SHALL CONDUCT A PRE-LIFT STATION CONSTRUCTION MEETING ON-SITE WITH CITY PERSONNEL FOR FINAL APPROVAL OF THE EQUIPMENT LOCATIONS.
15. FOR 20 HP AND ABOVE MOTORS PROVIDE SOLID STATE SOFT STARTERS.
16. FOR STATIONS PUMPING ABOVE 1000 GPM PROVIDE VARIABLE FREQUENCY DRIVES.
17. NOT ALL PUMP STATIONS WILL REQUIRE CHEMICAL FEED. IF REQUIRED SEE PROJECT SITE PLAN FOR TANK LOCATION. PROVIDE NEGATIVE SLOPE TO WETWELL FROM OUTSIDE WETWELL WALL TO PIPE END. DELETE CONDUITS WHERE NOT REQUIRED.
18. HATCH TO BE HINGED ON DISCHARGE PIPE SIDE OF WET WELL. FOR PUMPS 27 HP AND ABOVE INCREASE HATCH SIZE TO 36"X60". HATCH TO OPEN TO RISER PIPES.
19. CONTROL PANEL TO BE STAINLESS STEEL.

DATE REVISED: *AUGUST 16, 2012*			SECTION 498-4.1
Water & Sewer Department Utilities Division (352) 351-6772	CITY OF OCALA STANDARD DETAIL	SANITARY SEWER LIFT STATION	B
		SUBMERSIBLE INSTALLATION	SHT 1 OF 6

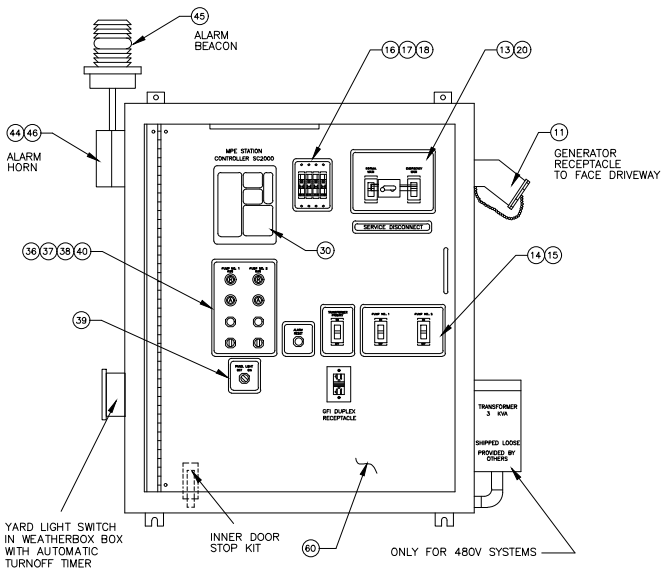

56 CABINET COMPONENTS AND LAYOUT

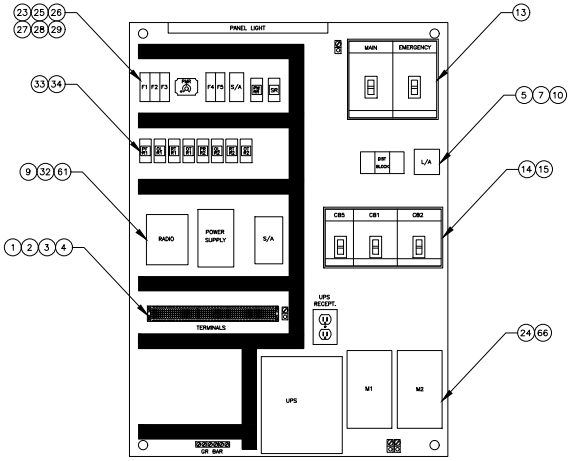

57 CABINET BACK PANEL

LEGEND

NUMERICAL LEGEND	SCHEMATIC LEGEND	DESCRIPTION	MANUFACTURER	PART NO.	QTY
1		TERMINAL,600VAC,35A,10 POLE	SIEMENS	8WA1 011-0DG21	5
2		TERMINAL MOUNTING RAIL, 35mm	SIEMENS	5ST11 46	1.25
3		TERMINAL MTG BRKT,30° ANGLE	SIEMENS	8WA7 46	2
4		TERMINAL END RETAINER	SIEMENS	8WA1 808	2
5		POWER DISTR.BLK.600VAC,175A,3 POLE	SQUARE D	9080-LBA362104	1
6		CLEAR PLEXIGLASS COVER FOR DISTR. BLK	SQUARE D	9080-LB23	1
7		LIGHTNING/SURGE, 480VAC, 3 PHASE, 3 WIRE	INTERMATIC	AG6503C	1
8		BRACKET FOR LIGHTNING /SURGE ARRESTOR	SQUARE D	QOSAMK	1
9		ARRESTOR,SURGE,24VDC	EDCO	DRS-030	1
10		ARRESTOR,SURGE,120V, 10KA	EDCO	HSP121BR-1RU	1
11		GENERATOR RECEPTACLE 600V, 100A, 4P,4W	RUSSELLSTOLL	JRS10441R	1
12		ANGLE ADAPTER, 100A w/30 DEGREE ANGLE	RUSSELLSTOLL	JAAB10	1
13		CIRCUIT BREAKER, 480VAC, 3 POLE 70A, 18KAIC	SQUARE D	FAL34070	2
14		CIRCUIT BREAKER, 480VAC, 3 POLE 30A, 18KAIC	SQUARE D	FAL34030	2
15		CIRCUIT BREAKER, 480VAC, 2 POLE, 15A, 18KAIC	SQUARE D	FAL24015	1
16		CIRCUIT BREAKER, 120VAC, 1 POLE, 10A, 10KAIC	SQUARE D	QOU110	2
17		CIRCUIT BREAKER, 120VAC, 1 POLE, 15A, 10KAIC	SQUARE D	QOU115	1
18		CIRCUIT BREAKER, 120VAC, 1 POLE, 30A, 10KAIC	SQUARE D	QOU130	1
19		HAT-SECTION	PCP, INC.		3
20		MANUAL TRANSFER ASSEMBLY	PCP, INC.		1
21		LARGE MANUAL TRANSFER BLOCK (E FRAME)	FAB TECH	PH-20015	1
22		EQUIPMENT GROUND BAR KIT, 9PT.	SQUARE D	PK9GTA	1
23		PHASE MONITOR RELAY,480 VOLT, 3 PH (8 PIN)	DIVERSIFIED	SUA-440-ASA	1
24		STARTER, FVNR,NEMA SIZE 2, 13-27A	FURNAS	14FSF32AA	2
25		FUSE, SLO-BLO, TIME DELAY, 250VAC, 1A	BUSSMAN	BUSFNM1	1
26		FUSE, SLO-BLO, TIME DELAY, 250VAC, 4A	BUSSMAN	BUSFNM4	1
27		FUSE, SLO-BLO, TIME DELAY, 500VAC, 1A	BUSSMAN	BUSFNQ1	3
28		FUSE BLOCK, 1 POLE	BUSSMAN	BUSBM6031PQ	2
29		FUSE BLOCK, 3 POLE	BUSSMAN	BUSBM6033PQ	1
30		STATION CONTROLLER, 1-4 PUMPS, 120VAC	MPE	SC2000-0	1
31		BIRDCAGE, 0-10 PSI, 0-24 FEET,mA OUTPUT	BLUE RIBBON INDU	3112BPN2GMCZFNHLM	1
32		POWER SUPPLY, 120VAC/12VDC, 1.7A	INTERNTNAL POWER	IHB12-1.7	1
33		RELAY, MINIATURE, 120VAC	SQUARE D	8501 RS43V20	10
34		RELAY SOCKET	SQUARE D	8501 NR43	10
35		RELAY SOCKET, OCTAL, 8 PIN, 600VAC	CUSTOM CONNECTI	RBO8-PC	1
36		PILOT LIGHT , LED 7/8" DIA , 120VAC, AMBER	IDI	26200K3	2
37		PILOT LIGHT, LED, 7/8" DIA. 120VAC, RED	IDI	26200K1	2
38		PUSHBUTTON, 22mm,NEMA 4X, FLH TYPE, BLACK	SQUARE D	ZB4BA2	3
39		SEL. Sw., 22mm NEMA 4X, 2POS. MAIN, OFF-ON	SQUARE D	ZB4BD2	1
40		SEL. Sw., 22mm NEMA 4X, 3POS. MAIN, OFF-ON	SQUARE D	ZB4BD3	2
41		CONTACT BLOCK, (1) NORMALLY OPEN	SQUARE D	ZB4BZ101	3
42		CONTACT BLOCK, (1) NORMALLY CLOSED	SQUARE D	ZB4BZ102	2
43		CONTACT BLOCK, (2) NORMALLY OPEN	SQUARE D	ZB4BZ103	2
44		ALARM BELL, 4", 120VAC	EDWARDS	876-N5	1
45		ALARM STROBE , RED, 120VAC	EDWARDS	50R-N5-40WH	1
46		WEATHER PROOF BACK BOX FOR 4" BELL	EDWARDS	348	1
47		1/2" x 6" SS NIPPLE	CAPITAL	6KR60	1
48		DUPLEX CONVENIENCE RECEP,20A, 125VAC	HUBBELL	CR20WHI	1
49		GFI DUPLEX CONVENIENCE RECEP.,15A, 120VAC	LEVITON	6599-W	1
50		HANDY BOX, 2" x 4"	THOMAS & BETTS	106-1/2-BW	1
51		RECEP. COVER, STANDAR DUPLEX, GALVAN FINISH			1
52		FLOURESCENT LIGHT FIX, 18" WIDE, SGLE LIGHT	COOPER	3GA54	1
53		FLOURESCENT LAMP, 15 WATTS	COOPER	1V173	1
54		NAMEPLATES,LASER-SCREENED,(FOR BREAKERS)	PCP, INC.		2
55		NAMEPLATES, LASER-SCREENED, (FOR CONTROL)	PCP, INC.		2
56		ENCLOSURE, NEMA 3R, SS, 48"H x 36"W x 12"D	SCHAEFER	SPRCH-483612SS	1
57		BACK PANEL, PAINTED WHITE STEEL, 12 GAUGE	SCHAEFER	SPP-4836	1
58		3pt. PADLOCKABLE LATCH KIT (medium)	SCHAEFER	LH3P-M	1
59		DOOR STOP KIT, 90° (OUTDOOR), N4-12-T304SS	FAB TECH	NH-45010	1
60		HINGED INNERDOOR, ALUMINUM	PCP, INC.	HID-4836	1
61		MDS SPREAD SPECTRUM RADIO	ADAPTIVE BROADB	MDS 9810	1
62		POLYPHASER SURGE PROTECTOR FOR ANTENNA	POLYPHASOR	IS-50NXC2	1
63		MAXRAD 9db YAG ANTENNA (REMOTES)	MAX RAD	MYA9306	1
64		3' CABLE (RADIO TO SURGE PROTECTION)	TEDI	CA-LMR195	1
65		100' CABLE (SURGE PROTECTION TO ANT)	TEDI	LMR400,2N-TYPE MALE	1
66		UPS	TRIPP-LITE	BCPRO600	1
67		SERIAL CABLE (RADIO TO COMPUTER-REQUIRED)			1

NOTE: MATERIALS TO BE AS SPECIFIED. SUBSTITUTIONS MUST BE APPROVED BY THE ENGINEER. RELAYS, PHASE MONITOR (3 PHASE) AND FUSES ARE TO BE SUPPLIED (120V) ON LEFT OF RELAY, PHASE MONITOR AND FUSE HOLDER. SUPPLY WIRE MUST ENTER ON LEFT SIDE OF RELAY TO OPERATE COIL OF RELAY. PHASE MONITOR 3 PHASES TO ENTER ON LEFT. FUSE HOLDERS TO BE FED ON LEFT.

FOR 480/277V SERVICES PROVIDE STEP DOWN TRANSFRMER IN SEPERATE SST PANEL, NEMA 3R

NOTE: NO TOP PENETRATIONS IN METER/MAIN/CONTROLCABINET/ETC.

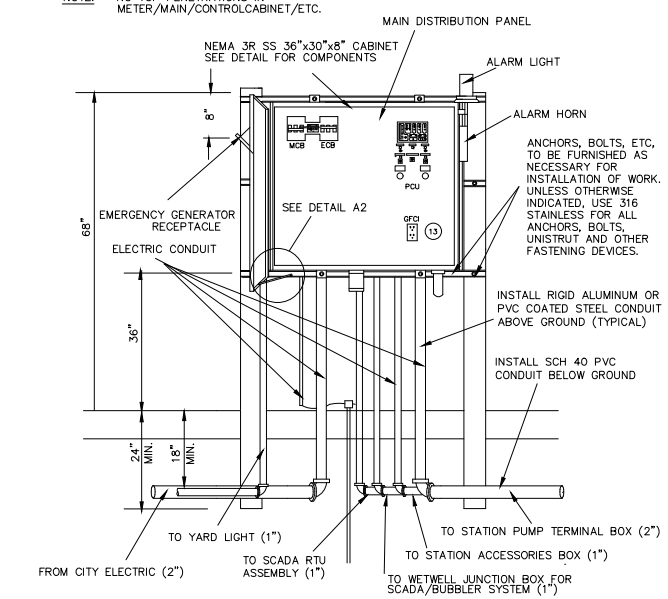

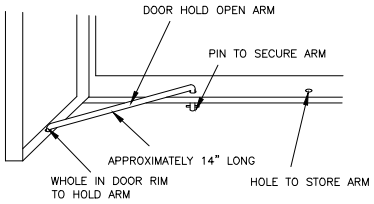

1. FURNISH HOLD OPEN ARMS FOR DOOR FRONT AND DEAD FRONT
2. OUTER DOOR SHOULD BE HELD OPEN AT APPROXIMATELY 100° TO CABINET. INNER DOOR TO BE APPROXIMATELY 90°.
3. BRING ALL I/O FROM MPE TO TERMINAL STRIP FOR FUTURE USE.
4. PROVIDE SINGLE 120 VOLT OUTLET FOR GENERATOR BATTERY CHARGER AND A STANDARD TWIST LOCK FOR THE START CIRCUIT ON GENERATOR.

DETAIL A2

MINIMUM SIZE CHANNEL FOR SUPPORTING EQUIPMENT SHALL BE 1 7/8" STAINLESS STEEL SUPPORTED NO MORE THAN 10' APART

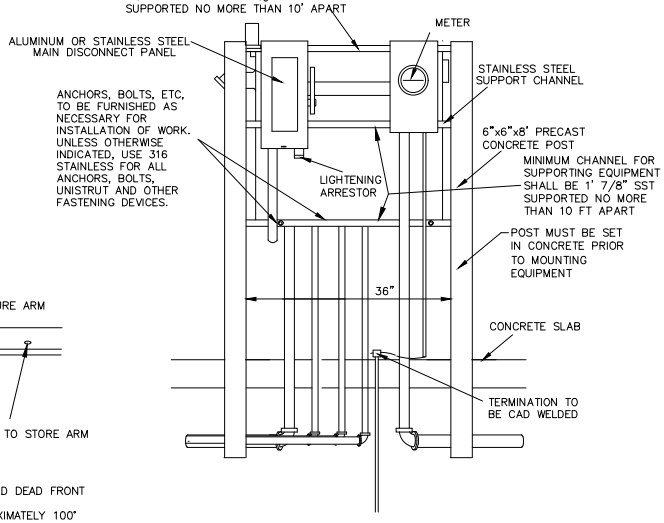

DETAIL A

DATE REVISED: *AUGUST 16, 2012*			SECTION 498-4.1
Water & Sewer Department Utilities Division (352) 351-6772	CITY OF OCALA STANDARD DETAIL	SANITARY SEWER LIFT STATION SUBMERSIBLE INSTALLATION	B SHT 2 OF 6

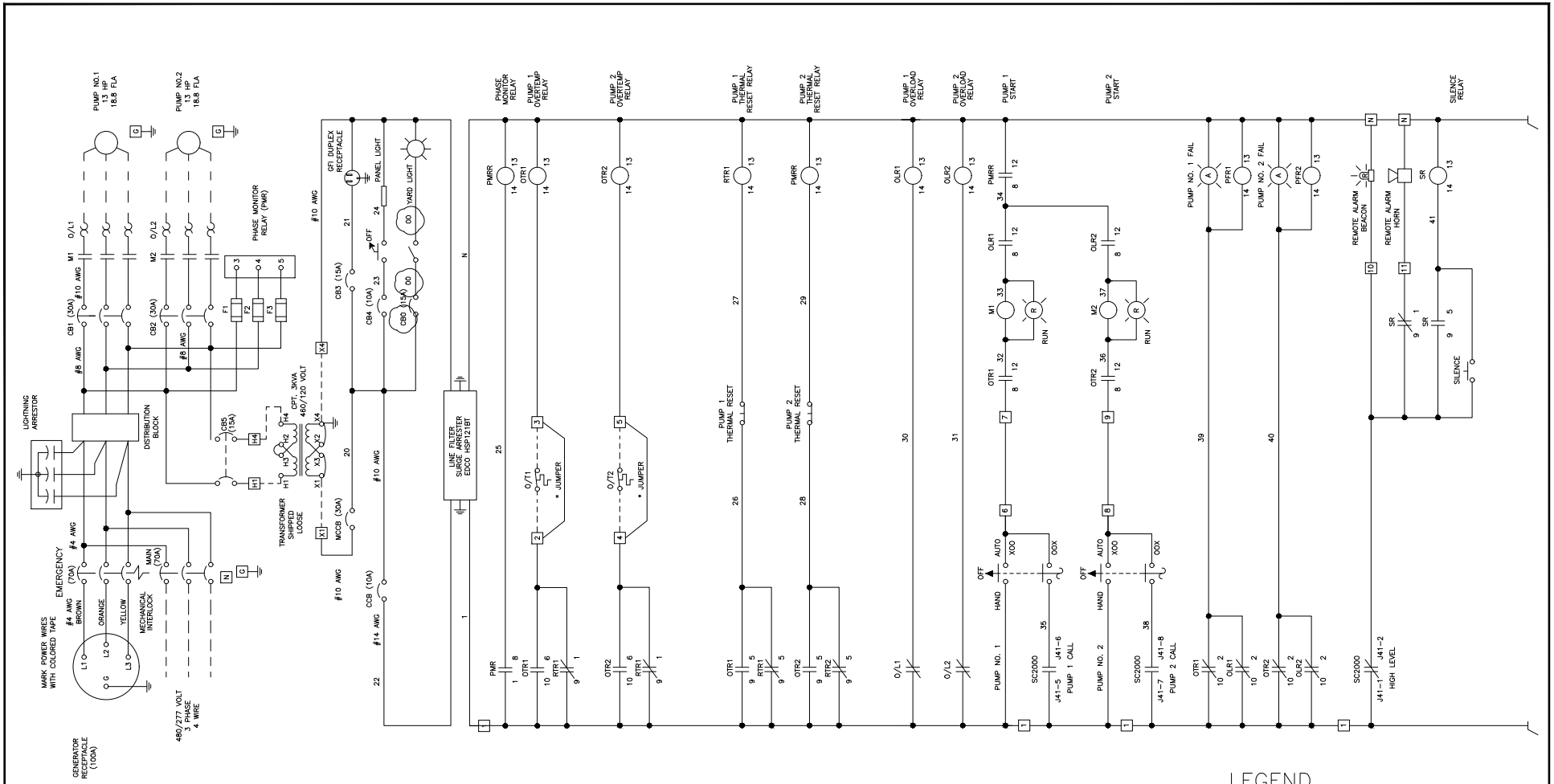

LEGEND

CB1	CONTROL BREAKER MAIN
CB2	CONTROL BREAKER TWO
CB3	CONTROL BREAKER THREE
CB4	CONTROL BREAKER FOUR
MCB1	MOTOR CIRCUIT BREAKER ONE
MCB2	MOTOR CIRCUIT BREAKER TWO
M1	MOTOR STARTER ONE/PUMP #1
M2	MOTOR STARTER TWO/PUMP #2
H	HAND OPERATION
O	OFF
A	AUTOMATIC
R8	PHASE LOSS MONITOR
P1	DIGITAL CONTROL/MOTOR #1
P2	DIGITAL CONTROL/MOTOR #2
SS1	SELECTOR SWITCH/MOTOR #1
SS2	SELECTOR SWITCH/MOTOR #2
GRD	GROUND
P.B.	PUSH BUTTON
A	PHASE 1 (A) OF LINE-BLACK
B	PHASE 2 (B) OF LINE-RED
C	PHASE 3 (C) OF LINE-BLUE
NUETRAL	NEUTRAL OF SERVICE LINE
PLM	PHASE LOSS MONITOR
AUX	AUXILARY TERMINAL SCREW ON LINE TOP OF MOTOR STARTER "A" PHASE
L1-5	CIRCUIT BREAKER TWO/LINE AFTER PHASE LOSS
$	CIRCUIT SWITCH LEVITON WALL TYPE
TSR	THERMAL SWITCH RELAY
N.O.	NORMALLY OPEN

- LIGHT
- ALARM HORN
- GROUND FAULT CIRCUIT INTERUPTOR
- MOTOR STARTER COIL
- PUSH BUTTON - MOMENTARY
- TRANSFORMER
- FUSE
- FLOAT SWITCH BALL
- MULTIPLE WIRES AT SAME TERMINATION
- DIGITAL CONTROL RELAY
- TEMPERATURE SENSOR
- LOCK OUT SLIDE SWITCH

DATE REVISED: *10/22/14*	PANEL SCHEMATIC-208/120V 3 PH		SECTION 498-4.1
Water & Sewer Department Utilities Division (352) 351-6772	CITY OF OCALA STANDARD DETAIL	SANITARY SEWER LIFT STATION SUBMERSIBLE INSTALLATION	B SHT 3 OF 6

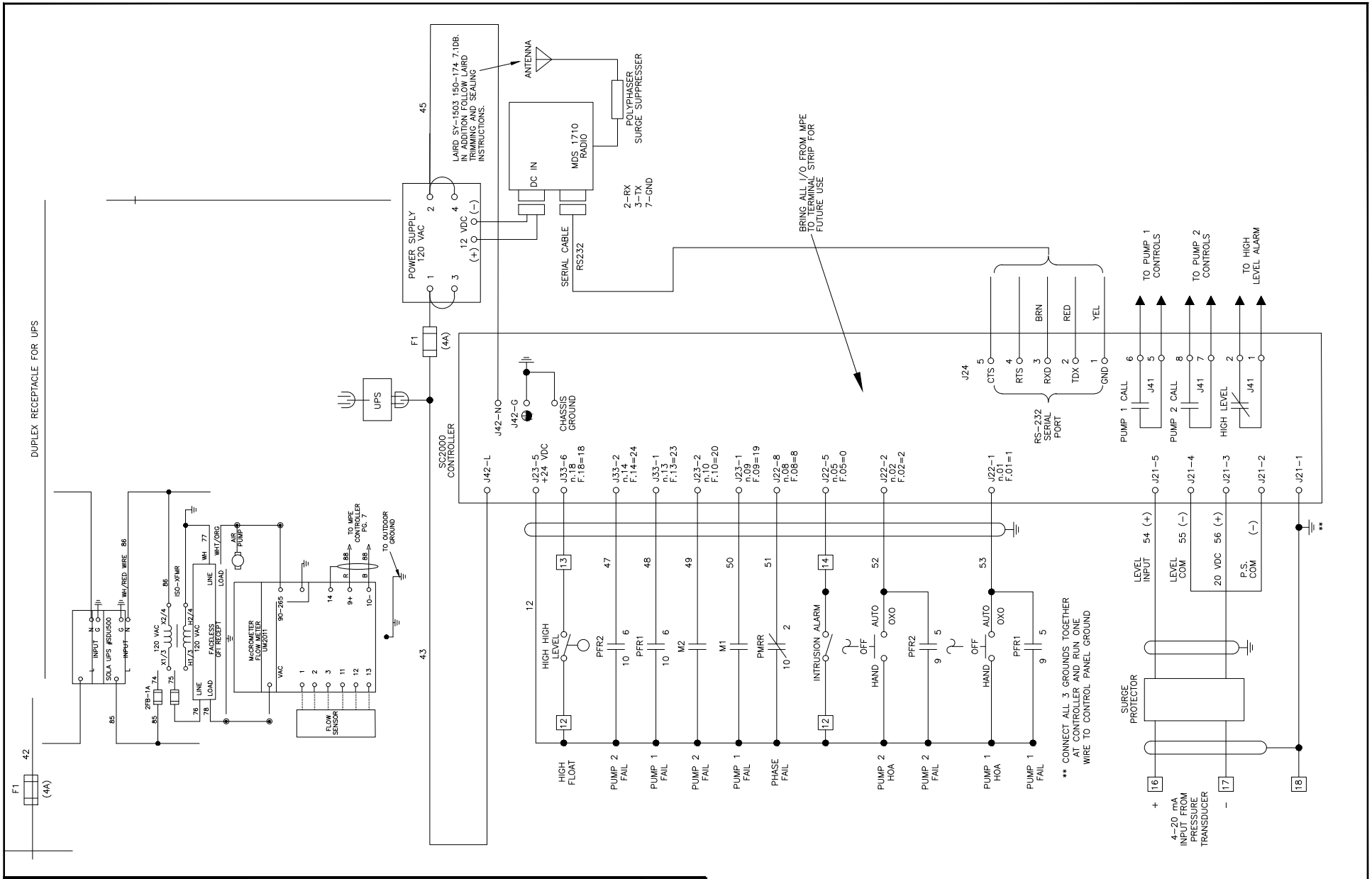

DATE REVISED: *AUGUST 16, 2012*	PANEL SCHEMATIC-208/120V 3 PH		SECTION 498-4.1
Water & Sewer Department Utilities Division (352) 351-6772	CITY OF OCALA STANDARD DETAIL	SANITARY SEWER LIFT STATION SUBMERSIBLE INSTALLATION	B SHT 4 OF 6

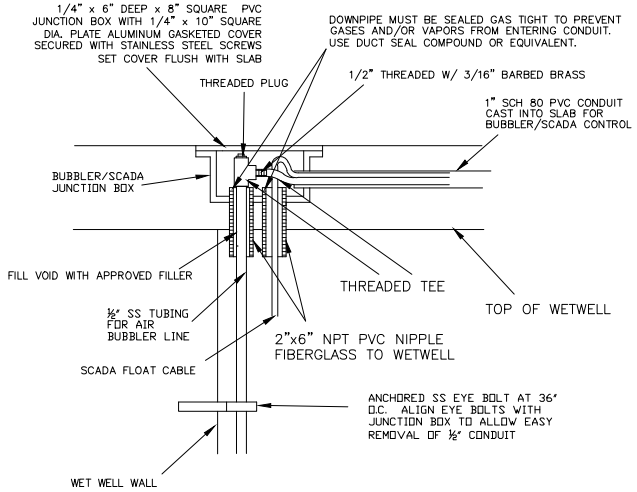

DETAIL A

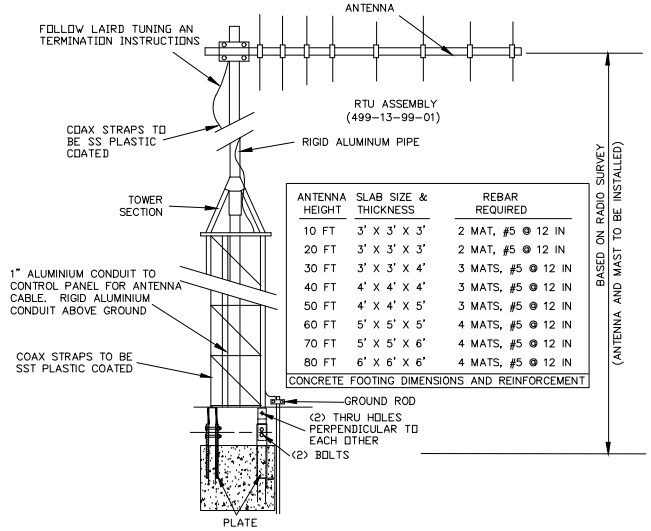

ANTENNA HEIGHT	SLAB SIZE & THICKNESS	REBAR REQUIRED
10 FT	3' X 3' X 3'	2 MAT, #5 @ 12 IN
20 FT	3' X 3' X 3'	2 MAT, #5 @ 12 IN
30 FT	3' X 3' X 4'	3 MATS, #5 @ 12 IN
40 FT	4' X 4' X 4'	3 MATS, #5 @ 12 IN
50 FT	4' X 4' X 5'	3 MATS, #5 @ 12 IN
60 FT	5' X 5' X 5'	4 MATS, #5 @ 12 IN
70 FT	5' X 5' X 6'	4 MATS, #5 @ 12 IN
80 FT	6' X 6' X 6'	4 MATS, #5 @ 12 IN
CONCRETE FOOTING DIMENSIONS AND REINFORCEMENT		

DETAIL C

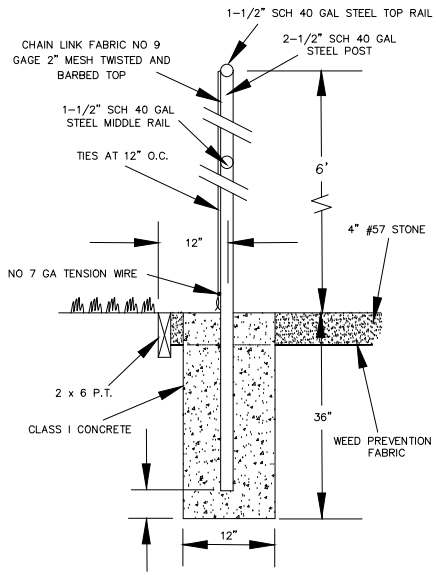

DETAIL D

CORNER POSTS TO BE 3" DIA. THRUST RODS INSTALLED AT CORNERS. CENTER RAILS INSTALLED AT CORNERS.

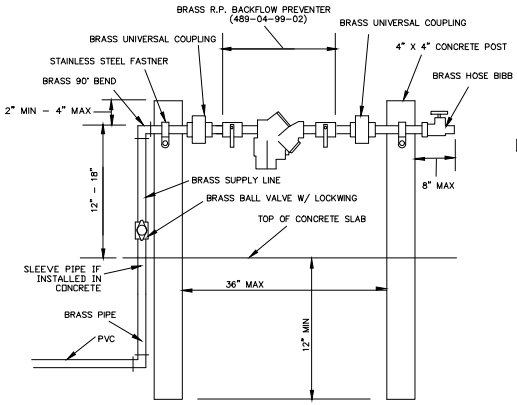

DETAIL B

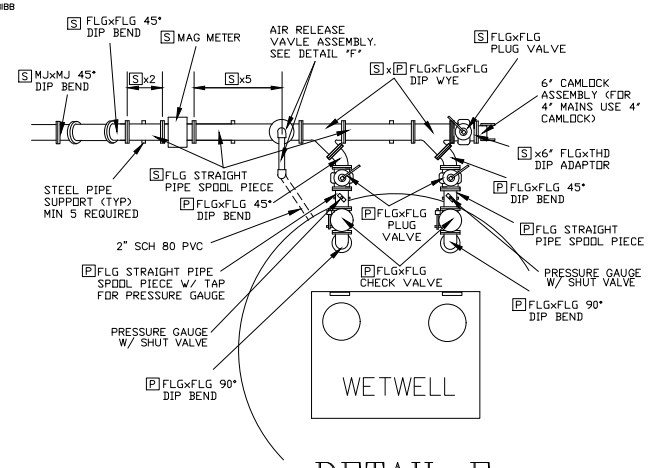

DETAIL E

REFER TO LIFT STATION DATA TABLE FOR DIAMETERS AND ELEVATIONS

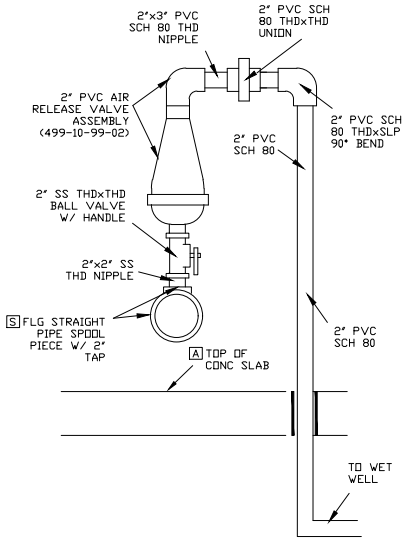

DETAIL F

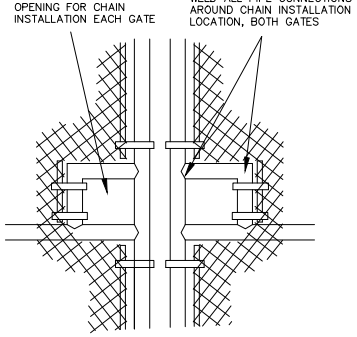

DETAIL G

GATE LATCH

DATE REVISED: *AUGUST 16, 2012*			SECTION 498-4.1
Water & Sewer Department Utilities Division (352) 351-6772	CITY OF OCALA STANDARD DETAIL	SANITARY SEWER LIFT STATION	B
		SUBMERSIBLE INSTALLATION	SHT 5 OF 6

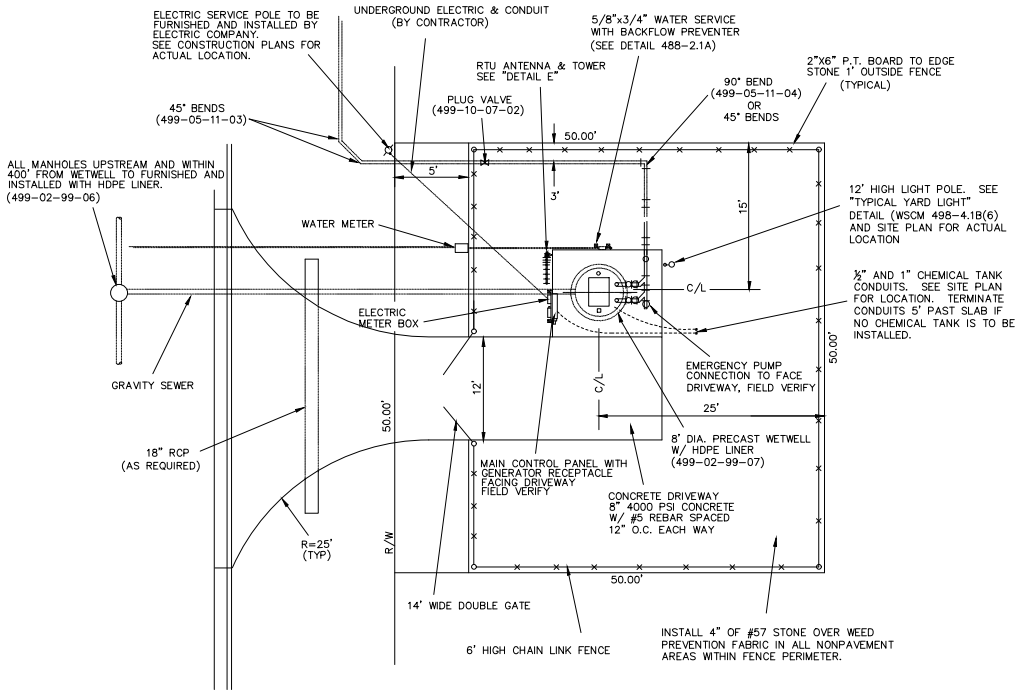

TYPICAL SITE PLAN FOR LIFT STATION

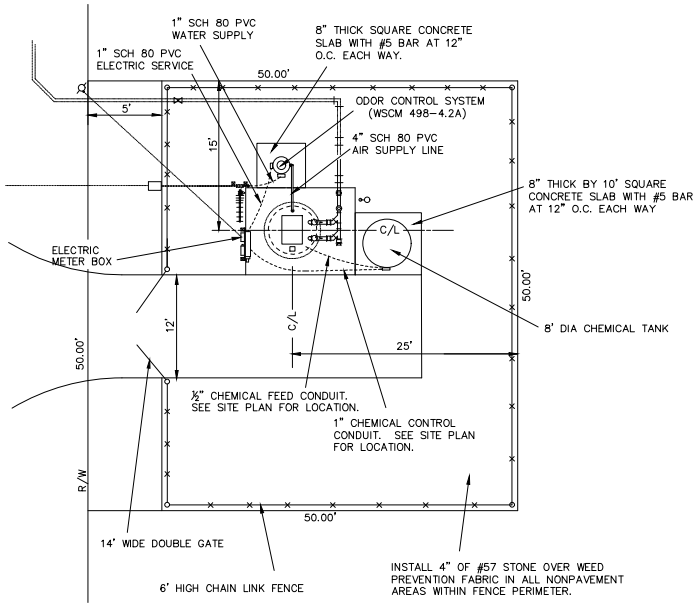

TYPICAL ODOR CONTROL AND/OR CHEMICAL TANK PLAN

LIFT STATION DATA							
PUMP SPECIFICATIONS		(*) ELEVATIONS			(*) DIAMETERS		
PUMP MANUF.		TOP OF SLAB	A		PUMP DISCHARGE	P	
PUMP MODEL #		FINISH GRADE	B		INFLUENT PIPE	Q	
PUMP SIZE		INFLUENT INVERT	C		WETWELL	R	
GPM		ALARM ON	D		FORCE MAIN	S	
TDH		2ND PUMP ON	E				
HP		1ST PUMP ON	F				
RPM		BOTH PUMPS OFF	G				
IMPELLER		WETWELL BOTTOM	H				
POWER		F.M. DISCHARGE	I				
		F.M. HIGH POINT	J				
(*) REFER TO CITY OF OCALA WATER AND SANITARY SEWER CONSTRUCTION MANUAL, 498-4.1B FOR LIFT STATION DETAILED DRAWING							

TYPICAL LIFT STATION DATA TABLE

SEE PROJECT PLANS FOR ACTUAL LIFT STATION DATA TABLE.

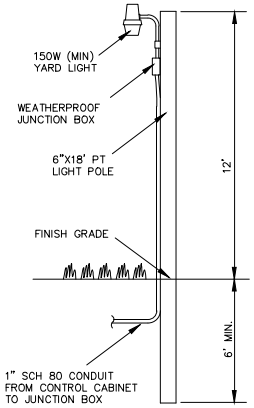

TYPICAL YARD LIGHT

SEE "TYPICAL SITE PLAN FOR LIFT STATION" FOR LOCATION. ACTUAL LOCATION TO BE SITE SPECIFIC AND DETERMINED IN THE FIELD OR AS INDICATED ON PROJECT SITE PLAN.

DATE REVISED: *AUGUST 16, 2012*			SECTION 498-4.1
Water & Sewer Department Utilities Division (352) 351-6772	CITY OF OCALA STANDARD DETAIL	SANITARY SEWER LIFT STATION SUBMERSIBLE INSTALLATION	B SHT 6 OF 6

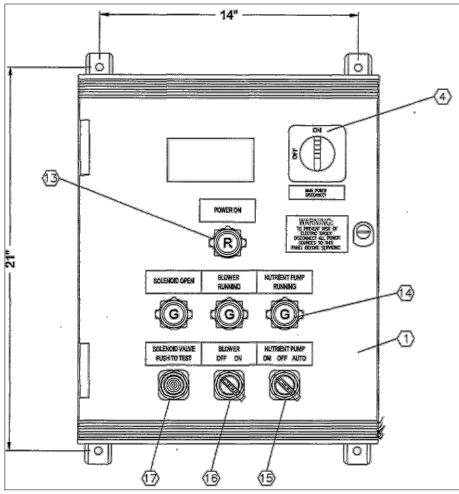

ELECTRICAL PANEL SPECIFICATIONS

1. ENCLOSURE: NEMA 3R, SST
2. WIRING: 14 AWG CLASS MTW OR THHN MINIMUM.
3. INTERNAL LAYOUT MAY BE DIFFERENT FROM ASBUILT PANEL.

HARDWARE:

1. 316 SS

INTRINSICALLY SAFE CONSTRUCTION:

1. ALL INSTRINSICALLY SAFE CIRCUITS TO BE RUN IN SEPARATE CONDUIT AND SEPARATED FROM NON-INTRINSICALLY SAFE CIRCUITS ACCORDING TO NEC ARTICLES 500 AND 504.
2. NAMEPLATES SHALL BE BLACK, SELF-ADHESIVE LAMCOID WITH WHITE LETTERING.
3. ALL COMPONENTS SHALL BE LABELED WITH COMPONENT ON BACK PANEL.
4. ALL WIRES/CABLES TO BE LABELED WITH SLEEVE OR SHRINK TYPE LABELS.
5. ALL TERMINAL BLOCK LABELS TO BE MACHINE PRINTED.
6. WIRING TO TERMINAL BLOCKS TO BE DONE SUCH THAT ALL FIELD WIRING IS ON A COMMON SIDE OF THE TERMINAL STRIP.

ELECTRICAL COMPONENT NOTES:

1. FOR LEGEND SEE PARTS LIST 000191-E-13

CONTRACTOR INSTALLATION NOTES:

1. ALL INTRINSICALLY SAFE CIRCUITS TO BE RUN IN SEPARATE CONDUIT. GROUND ROD IS TO BE CONNECTED TO A SEPARATE EARTH GROUND OUTSIDE OF THE CONTROL PANEL.

RELEVANT ELECTRICAL CODES:

1. PANEL TO BE CERTIFIED IN COMPLIANCE WITH UL-508A (UL LISTED).

WIRE COLORS TO BE AS FOLLOWS (PER UL SPECIFICATIONS):

SUPPLY VOLTAGE	BLACK
CONTROL VOLTAGE	RED
INTRINSICALLY SAFE	LIGHT BLUE
NEUTRAL	WHITE
EARTH/GROUND	GREEN
DRY CONTACTS	YELLOW
DC CONTROL CIRCUITS	BLUE
DC COM	WHITE WITH BLUE STRIPE

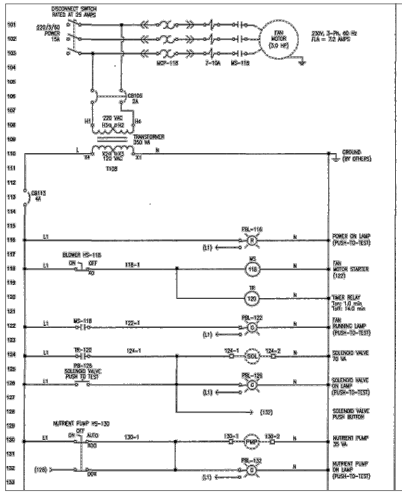

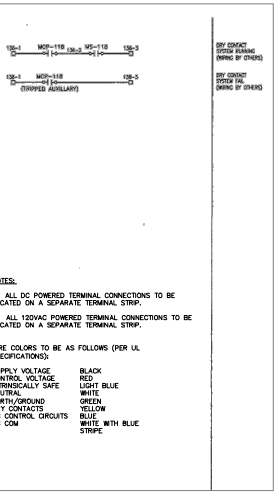

NOTES:

1. ALL DC POWERED TERMINAL CONNECTIONS TO BE LOCATED ON A SEPARATE TERMINAL STRIP.

2. ALL 120VAC POWERED TERMINAL CONNECTIONS TO BE LOCATED ON A SEPARATE TERMINAL STRIP.

WIRE COLORS TO BE AS FOLLOWS (PER UL SPECIFICATIONS):

SUPPLY VOLTAGE	BLACK
CONTROL VOLTAGE	RED
INTRINSICALLY SAFE	LIGHT BLUE
NEUTRAL	WHITE
EARTH/GROUND	GREEN
DRY CONTACTS	YELLOW
DC CONTROL CIRCUITS	BLUE
DC COM	WHITE WITH BLUE STRIPE

NOTES:
1. SHIPPING WEIGHT: ~ 3,600 LBS (INCLUDES MEDIA)
OPERATING WEIGHT: ~ 4,300 LBS (INCLUDES MEDIA)
2. PLACE ON LEVEL GROUND ON 6" THICK CONCRETE PAD.
MAKE SURE THAT THE PAD IS CLEAN AND ANY PEBBLES OR IMPERFECTIONS IN THE CONCRETE HAVE BEEN REMOVED.
3. TRUE ORIENTATION IN PLAN VIEW ONLY.
4. SERVICE REQUIREMENTS:
ELECTRICAL: 230/480 VAC, 3 PH, 10 AMPS, 60 HZ
POTABLE WATER: 3/4" LINE (30 PSI MIN.)
5. UNIT TO BE INSTALLED (BY CONTRACTOR) ON 1/4" THICK NEOPRENE RUBBER SHEET (SUPPLIED BY SIEMENS) OF 60 DUROMETER
6. COLOR TO BE WHITE
7. BACKFLOW PREVENTER, IF REQUIRED, PROVIDED BY OTHERS.
8. 6" (MIN.) BAROMETRIC P-TRAP ON DRAIN, PROVIDED BY OTHERS.
9. ZABOCS 54 SYSTEM IS RATED UP TO 300 CFM (15 PPM TO 200 PPM HYDROGEN SULFIDE)

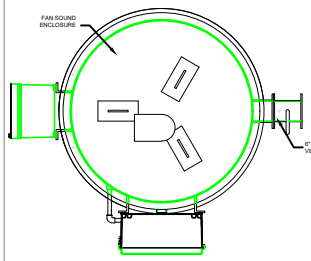

PLAN VIEW

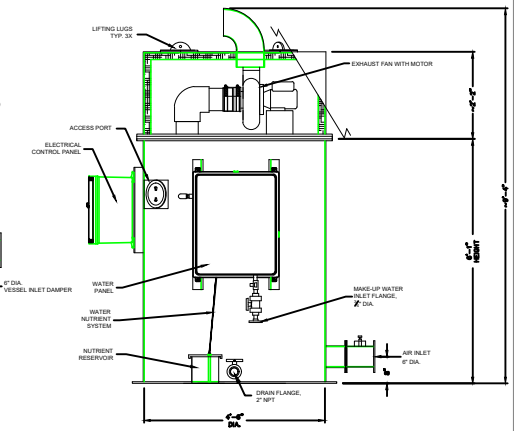

ELEVATION VIEW

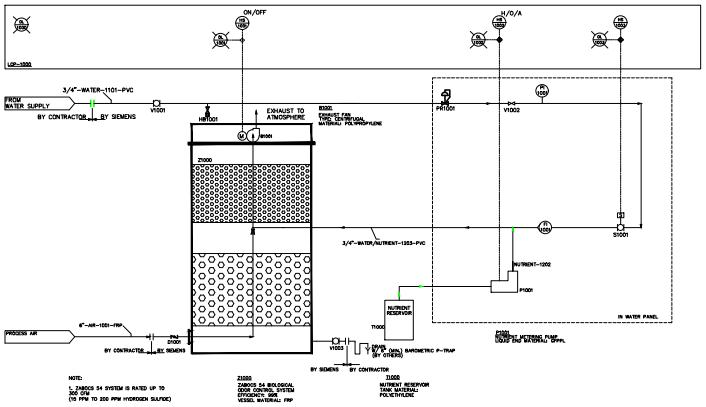

NOTES:
1. ALL WATER SUPPLY AND DRAIN LINES BY OTHERS.
2. 230V, 3 PH, 60 Hz POWER SUPPLY TO CONTROL PANEL BY OTHERS.
3. 6" BAROMETRIC P-TRAP BY OTHERS.

Electrical Control Panel Parts List

PART NO.	QTY	PART DESCRIPTION	MAT'L	MFR	CATALOG NUMBER
1	1	Enclosure, N EMA 4X, 20" x 16" x 12" Deep	FRP	Hoffman	LAJ204030
2	1	Enclosure, Backpanel, 20" x 16"	Steel	Hoffman	A20P16
3	1	Rotary Type Disconnected Switch, 25 A	Misc	Siemens	LEV53025
4	1	Rotary Switch Door Handle, NEMA 4X	Misc	Siemens	LEV49
5	1	Rotary Type Shaft, 12" Long (Not Shown)	Misc	Siemens	LEV5525
6	1	3-Pole Circuit Breaker, 4A, Trip Curve D	Misc	Allen-Bradley	140U-K2D040
7	1	3-Pole Circuit Breaker, 3A, Trip Curve D	Misc	Allen-Bradley	140U-K2D030
8	1	Combination Starter, 1-10A	Misc	Siemens	3RA10 25-1AA04-1AK6
9	1	Transformer 230/120V, 250VA	Misc	Siemens	VT0250CA
10	1	30 Pole Grounding Bar Kit (Not Shown)	Misc	Square D	PK10GTA
11	2	Terminal End Clamps (Not Shown)	Misc	Phoenix Contact	D-UK 4/10 (3000 2010)
12	18	Terminal Block, Clamp Type	Misc	Phoenix Contact	UK 5 N (3004 362)
13	1	Pilot Lamp, Push to Test, 30mm, Class 52, Red Lens, 120 VAC w/Ch LED	Misc	Siemens	52ETR52AB
14	3	Pilot Lamp, Push to Test, 30 mm, Class 52, Green Lens, 120 VAC with LED	Misc	Siemens	52ETR52AG
15	1	3-Position Selector Switch, 30mm, Class 52, 2N.O./2N.C.	Misc	Siemens	52SK2CAB A2
16	1	3-Position Selector Switch, 30mm, Class 52, 1N.O./1N.C.	Misc	Siemens	52SK2AA-5A1
17	1	Push Push Button	Misc	Siemens	52PB4JK
18	1	Relay Timer Recycle 5 PDT	Misc	ATC	5-DK22A100PSDK
19	1	Relay Base, 8-Pin, Plug-in (Not Shown)	Misc	Siemens	3TX7 441-1E2
20	A/R	Wire, 14 G, MTW, Stranded, Black, Red, White, Green (Not Shown)	Copper		
21	A/R	Wire, 14 G, MTW, Stranded, Brown, Orange, Yellow (Not Shown)	Copper		
22	A/R	Wire, 10 G, MTW, Stranded, Brown, Orange, Yellow (Not Shown)	Copper		

DATE REVISED: *AUGUST 16, 2012*			SECTION 498-4.2
Water & Sewer Department Utilities Division (352) 351-6772	CITY OF OCALA STANDARD DETAIL	SANITARY SEWER LIFT STATION	A
		SUBMERSIBLE INSTALLATION	SHT 1 OF 1

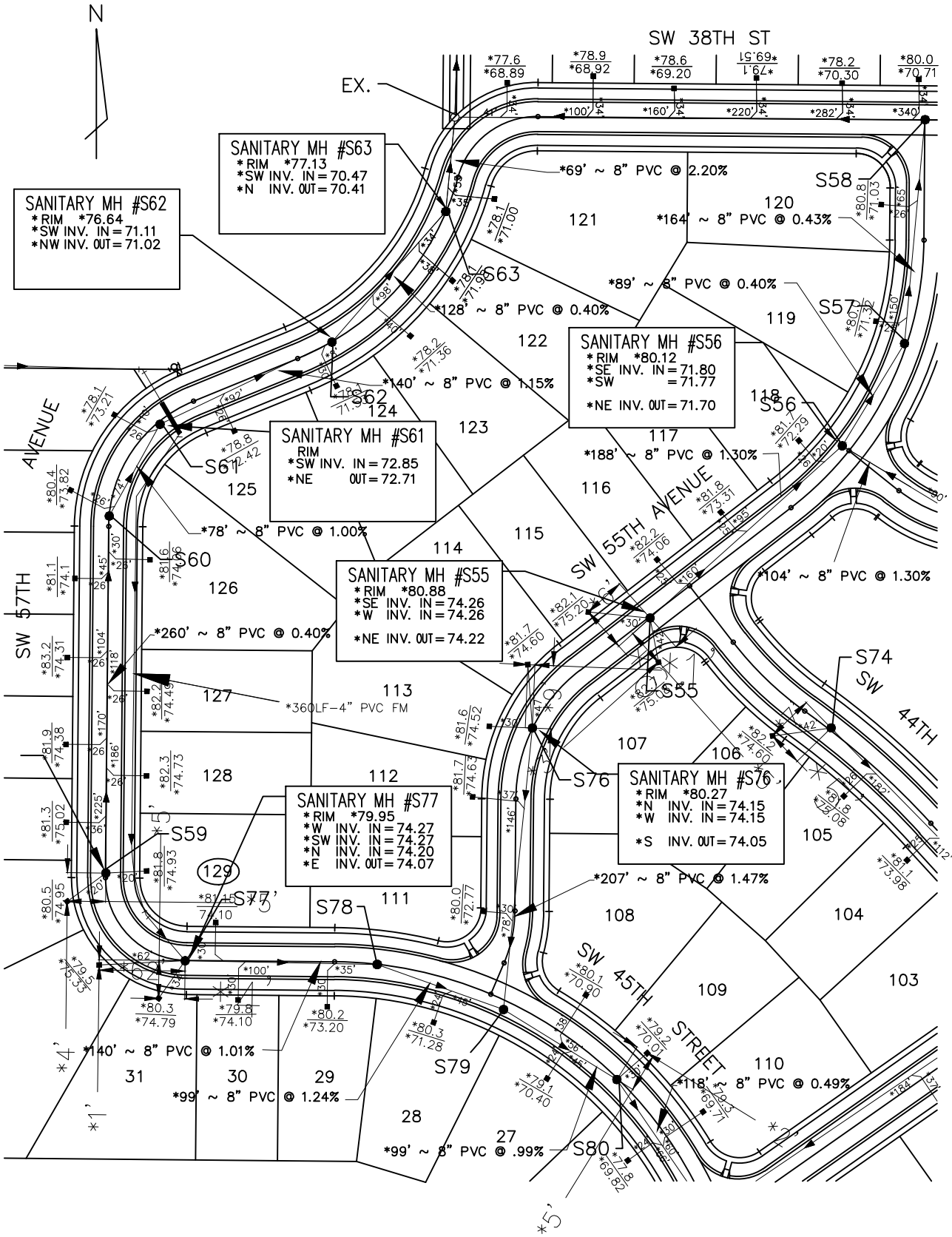

DATE REVISED: *FEBRUARY 16, 2007*

SECTION 498–9.1

Water & Sewer Department
Utilities Division
(352) 351–6772

CITY OF OCALA
STANDARD DETAIL

TYPICAL SANITARY SEWER
ASBUILT DRAWING

A

SHT 1 OF 1

\\sharedept\Clust3\Water_sd-WS-Engineering\Water & Sewer Construction Manual\August 2012\Details\Sewer-Rev. August 2012\49891A 021607.dwg, 11/8/2016 1:52:31 PM

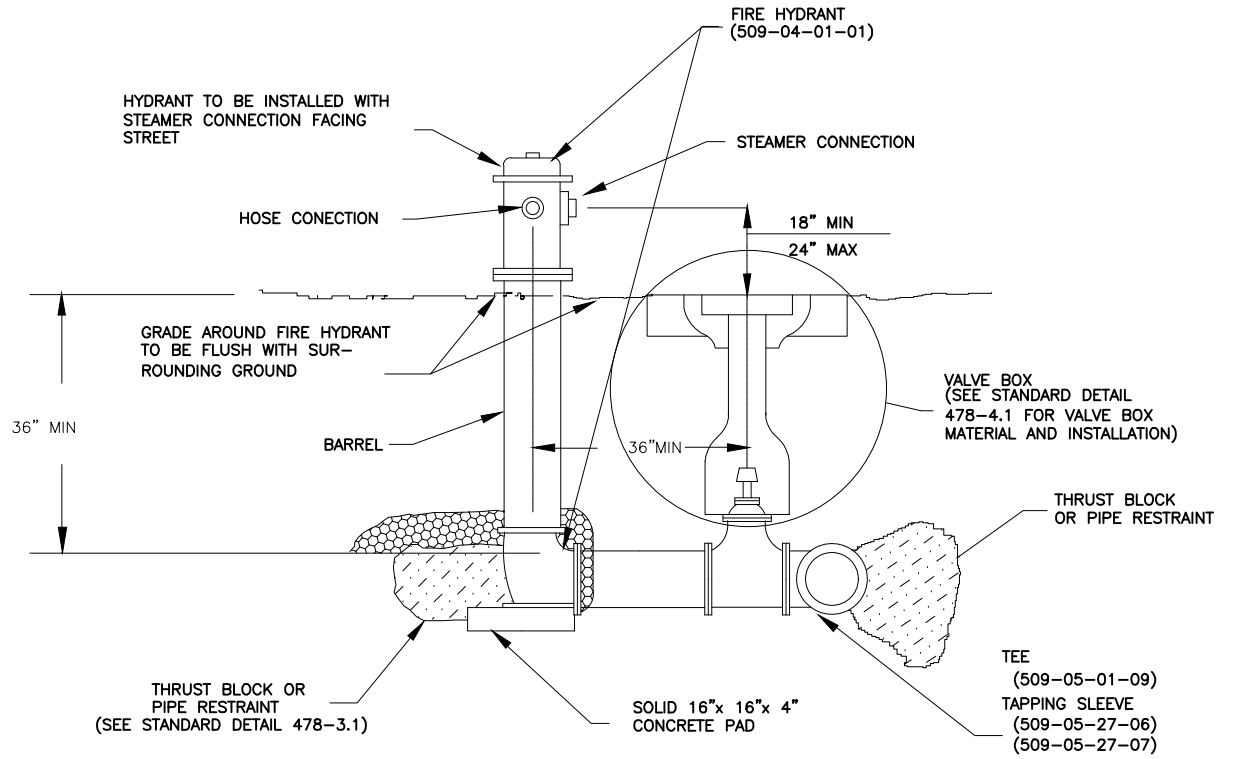

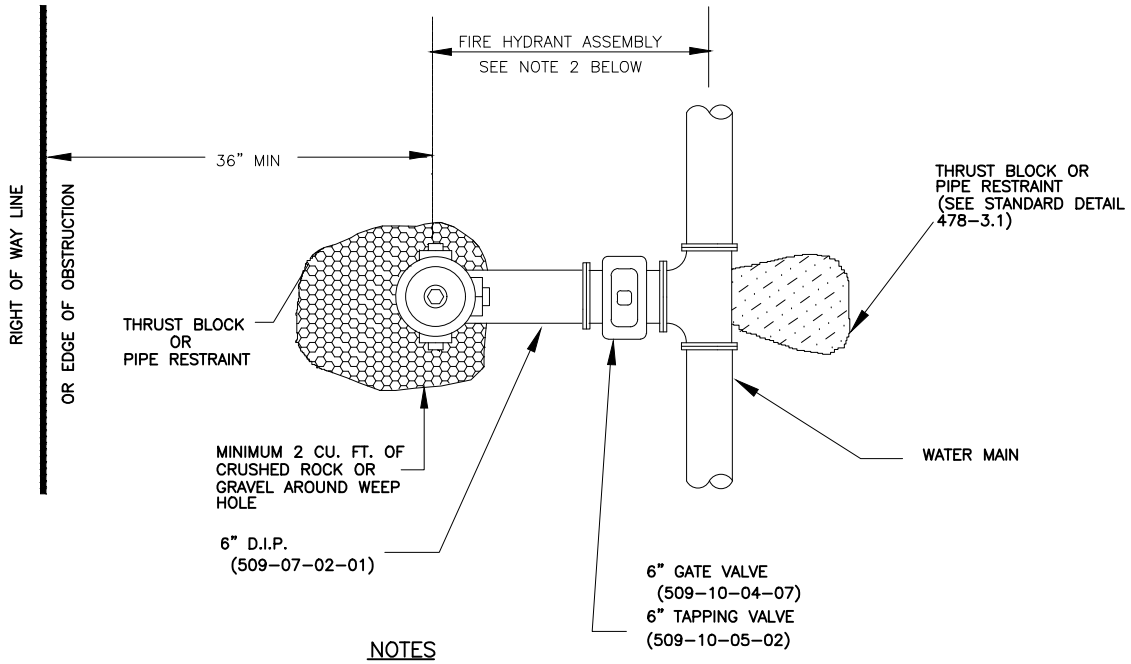

NOTES

1. NO MORE THAN ONE BARREL SECTION SHALL BE ALLOWED WHEN ADJUSTING HYDRANT TO FINISHED GRADE. HYDRANT EXTENSIONS ARE TO BE SAME MANUFACTURER AS HYDRANT. MAXIMUM LENGTH OF EXTENSION SHALL BE 24".
2. FIRE HYDRANT ASSEMBLY INCLUDES TEE, VALVE, VALVE BOX, 6" PIPE AND FIRE HYDRANT.
3. NEW HYDRANTS TO BE INSTALLED WITH "OUT OF SERVICE" DONUT (489-04-99-11). INSTALL ON STEAMER NOZZLE "UNTIL HYDRANT IS ACCEPTED BY FIRE DEPARTMENT. SEE SECTION 501.4.6.6
4. ORIENTATION OF STEAMER CONNECTION SHALL BE AS DIRECTED BY THE ENGINEER.
5. NEW FIRE HYDRANTS TO BE FACTORY PAINTED REUSE "PURPLE".
6. PROVIDE ONE BLUE REFLECTIVE PAVEMENT MARKER (RPM) IN CENTER OF THE CLOSEST VEHICLE TRAVEL LANE, DIRECTLY OPPOSITE THE HYDRANT LOCATION

DATE REVISED: *DECEMBER 19, 2012*			SECTION 508-1.1
Water & Sewer Department Utilities Division (352) 351-6772	CITY OF OCALA STANDARD DETAIL	FIRE HYDRANT ASSEMBLY PERPENDICULAR TO MAIN	A SHT 1 OF 1

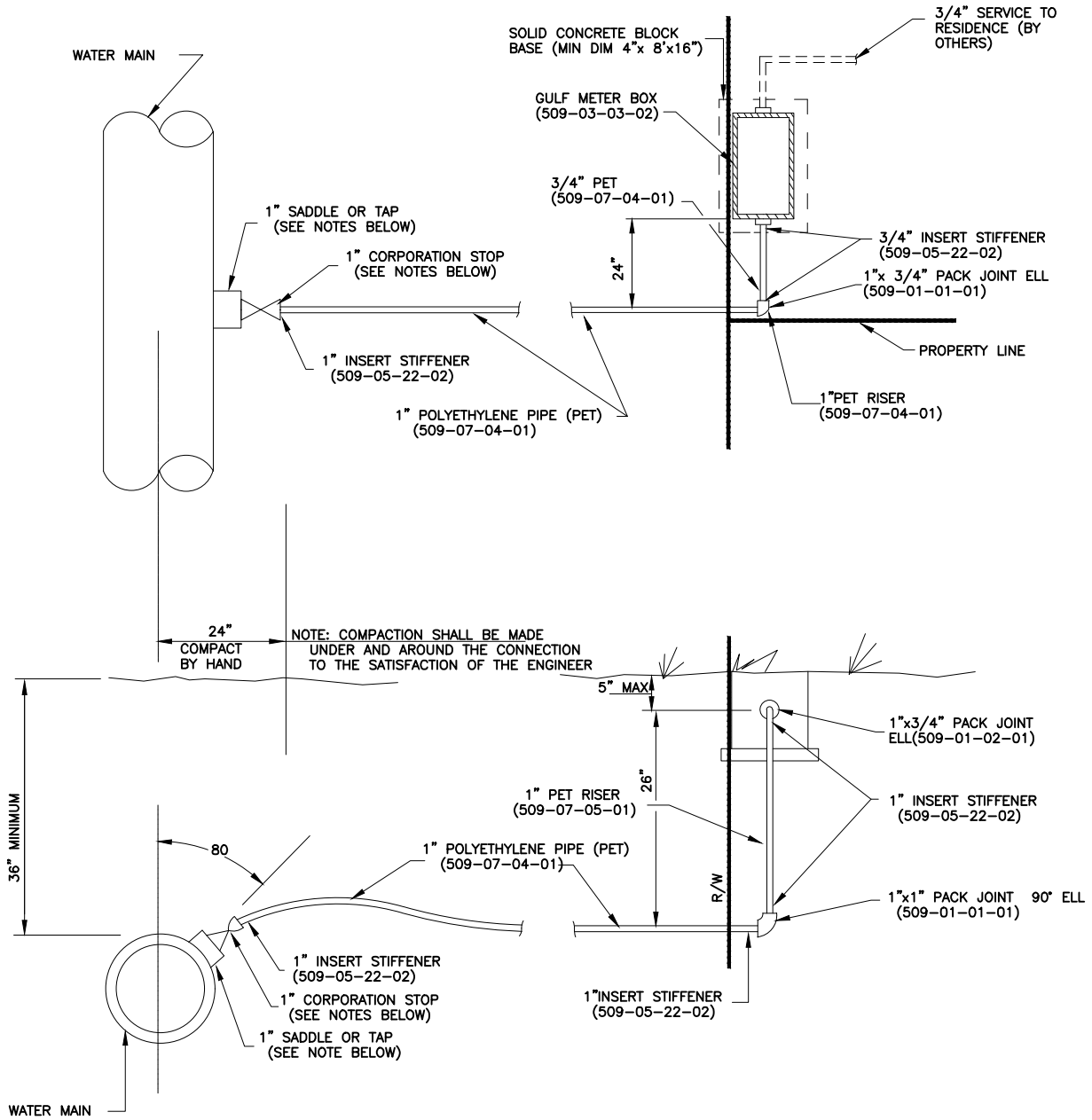

NOTES

1. METER BOXES SET IN PAVEMENT SHALL BE POLYMERE CONCRETE (509-03-09-02) WITH COVER AND METER READERS LID.
2. WATER SERVICE TO BE INSTALLED WITH SOLID COPPER LOCATING WIRE. SEE STANDARD DETAIL 478-7.1 FOR LOCATING WIRE INSTALLATION.
3. ON NEW 2" PVC WATER MAINS, A 2" x 1" TAPPING SADDLE (509-09-02-08) AND 1" CORRPORATION STOP (509-10-02-01) SHALL BE USED WHEN INSTALLING SERVICE CONNECTIONS.
4. ON EXISTING 2" GALVANIZED WATER MAINS, A SERVICE CLAMP (509-09-02-01) AND 1" CORPORATION STOP (509-10-02-02) SHALL BE USED WHEN INSTALLING SERVICE CONNECTIONS.
5. ON NEW OR EXISTING WATER MAINS WITH A DIAMETER OF 6" OR LARGER, A 1" TAP SHALL BE MADE INTO THE MAIN AND A 1" CORPORATION STOP (509-10-02-02) SHALL BE USED WHEN INSTALLING SERVICE CONNECTIONS.
6. THE BRASS EXPANSION CONNECTION SUPPLIED WITH THE METER BOX SHALL BE DELIVERED TO THE INSPECTOR AT THE TIME OF FINAL INSPECTION.
7. LONG SERVICES UNDER PAVEMENT REQUIRE 2" CASING OF PVC, HDPE OR STEEL.

DATE REVISED: *FEBRUARY 4, 2013*			SECTION 508-2.1
Water & Sewer Department Utilities Division (352) 351-6772	CITY OF OCALA STANDARD DETAIL	WATER SERVICE SINGLE 3/4" WATER SERVICE	A SHT 1 OF 1

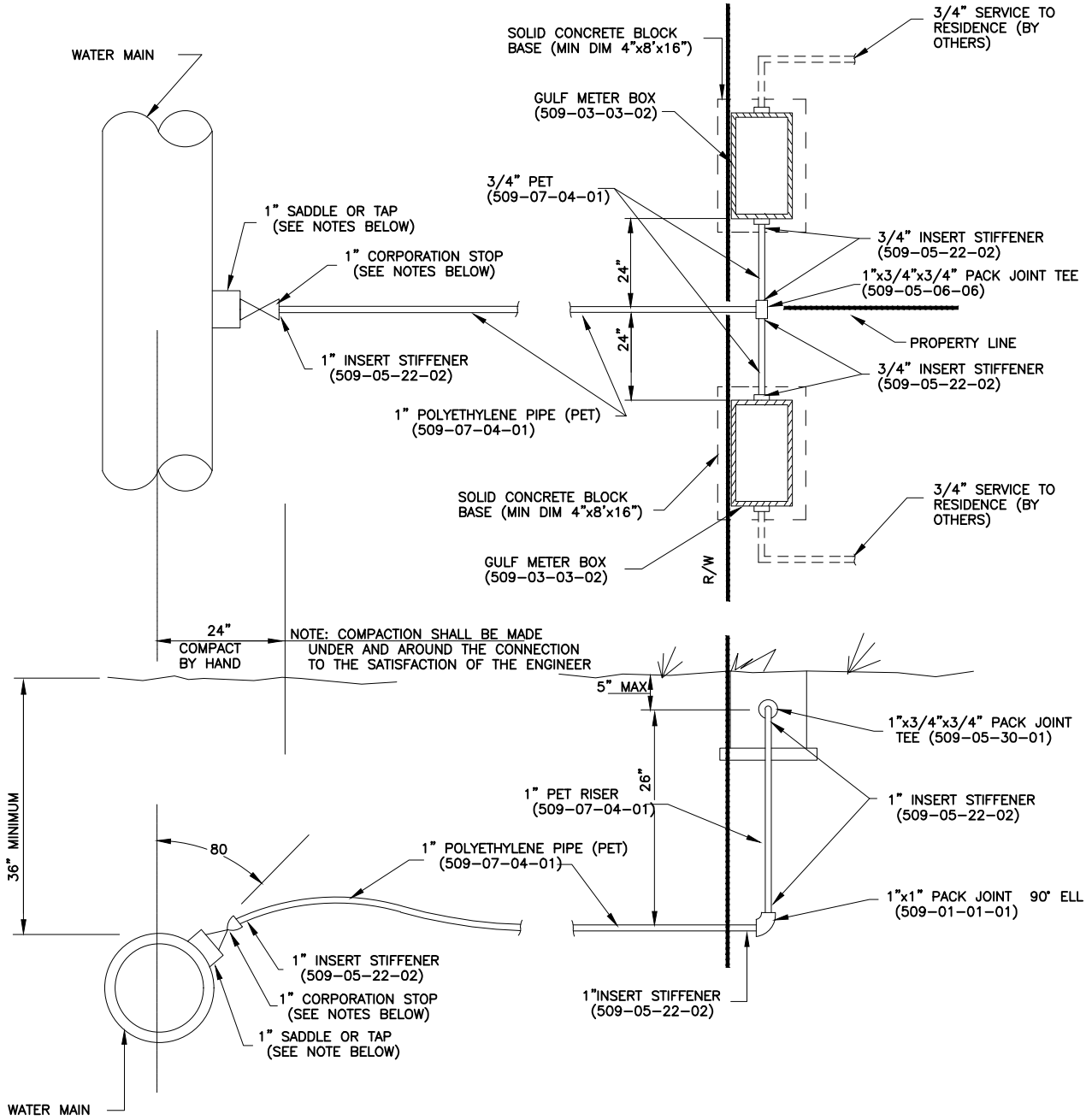

NOTES

1. METER BOXES SET IN PAVEMENT SHALL BE POLYMERE CONCRETE (509-03-09-02) WITH COVER AND METER READERS LID.
2. WATER SERVICE TO BE INSTALLED WITH SOLID COPPER LOCATING WIRE. SEE STANDARD DETAIL 478-7.1 FOR LOCATING WIRE INSTALLATION.
3. ON NEW 2" PVC WATER MAINS, A 2" X 1" TAPPING SADDLE (509-09-02-01) AND A 1" CORPORATION STOP (509-10-02-01) SHALL BE USED WHEN INSTALLING SERVICE CONNECTIONS.
4. ON EXISTING 2" GALVANIZED WATER MAINS, A SERVICE CLAMP (509-09-02-01) AND 1" CORPORATION STOP (509-10-02-02) SHALL BE USED WHEN INSTALLING SERVICE CONNECTIONS.
5. ON NEW OR EXISTING WATER MAINS WITH A DIAMETER LARGER THAN 2", A 1" TAP SHALL BE MADE INTO THE MAIN AND A 1" CORPORATION STOP (509-10-02-02) SHALL BE USED WHEN INSTALLING SERVICE CONNECTIONS.
6. THE BRASS EXPANSION CONNECTION SUPPLIED WITH THE METER BOX SHALL BE DELIVERED TO THE ENGINEERING INSPECTOR AT THE TIME OF FINAL INSPECTION.
7. LONG SERVICES UNDER PAVEMENT REQUIRE 2" CASING OF PVC, HDPE OR STEEL.

DATE REVISED: *DECEMBER 19, 2012*			SECTION 508-2.1
Water & Sewer Department Utilities Division (352) 351-6772	CITY OF OCALA STANDARD DETAIL	WATER SERVICE DOUBLE 3/4" WATER SERVICE	B SHT 1 OF 1

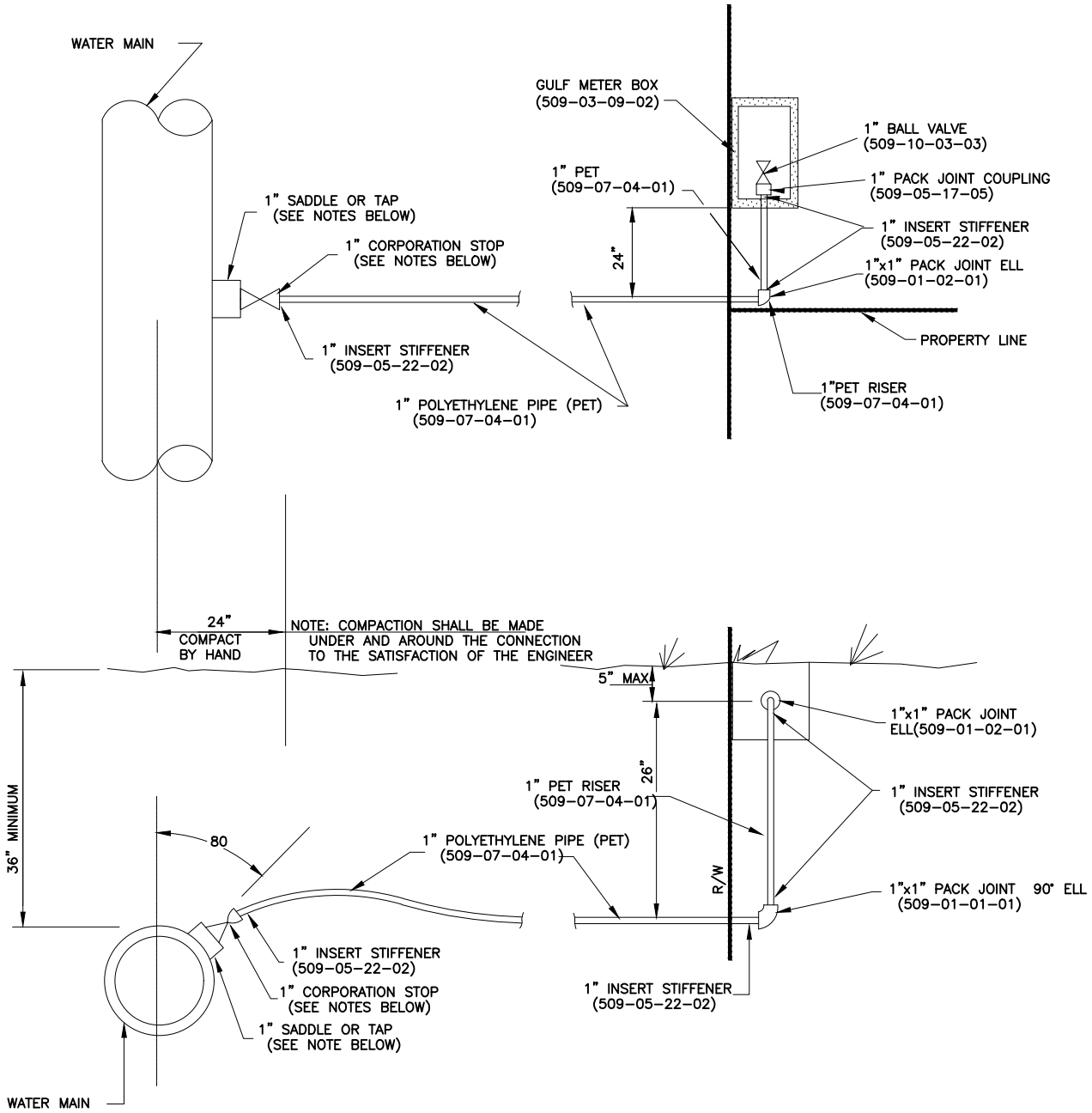

NOTES

1. METER BOXES SET IN PAVEMENT SHALL BE POLYMER CONCRETE (509-03-09-02) WITH COVER AND METER READERS LID.
2. WATER SERVICE TO BE INSTALLED WITH SOLID COPPER LOCATING WIRE. SEE STANDARD DETAIL 478-7.1 FOR LOCATING WIRE INSTALLATION.
3. ON NEW 2" PVC WATER MAINS, A 2" x 1" TAPPING SADDLE (509-09-02-01) AND 1" CORPORATION STOP (509-10-02-01) SHALL BE USED WHEN INSTALLING SERVICE CONNECTIONS.
4. ON EXISTING 2" GALVANIZED WATER MAINS, A SERVICE CLAMP (509-09-02-01) AND 1" CORPORATION STOP (509-10-02-02) SHALL BE USED WHEN INSTALLING SERVICE CONNECTIONS.
5. ON NEW OR EXISTING WATER MAINS WITH A DIAMETER LARGER THAN 2", A 1" TAP SHALL BE MADE INTO THE MAIN AND A 1" CORPORATION STOP (509-10-02-02) SHALL BE USED WHEN INSTALLING SERVICE CONNECTIONS.
7. LONG SERVICES UNDER PAVEMENT REQUIRE 2" CASING OF PVC, HDPE OR STEEL.

DATE REVISED: *AUGUST 14, 2012*			SECTION 508-2.1
Water & Sewer Department Utilities Division (352) 351-6772	CITY OF OCALA STANDARD DETAIL	WATER SERVICE SINGLE 1" WATER SERVICE RESIDENTIAL INSTALLATION	C SHT 1 OF 1

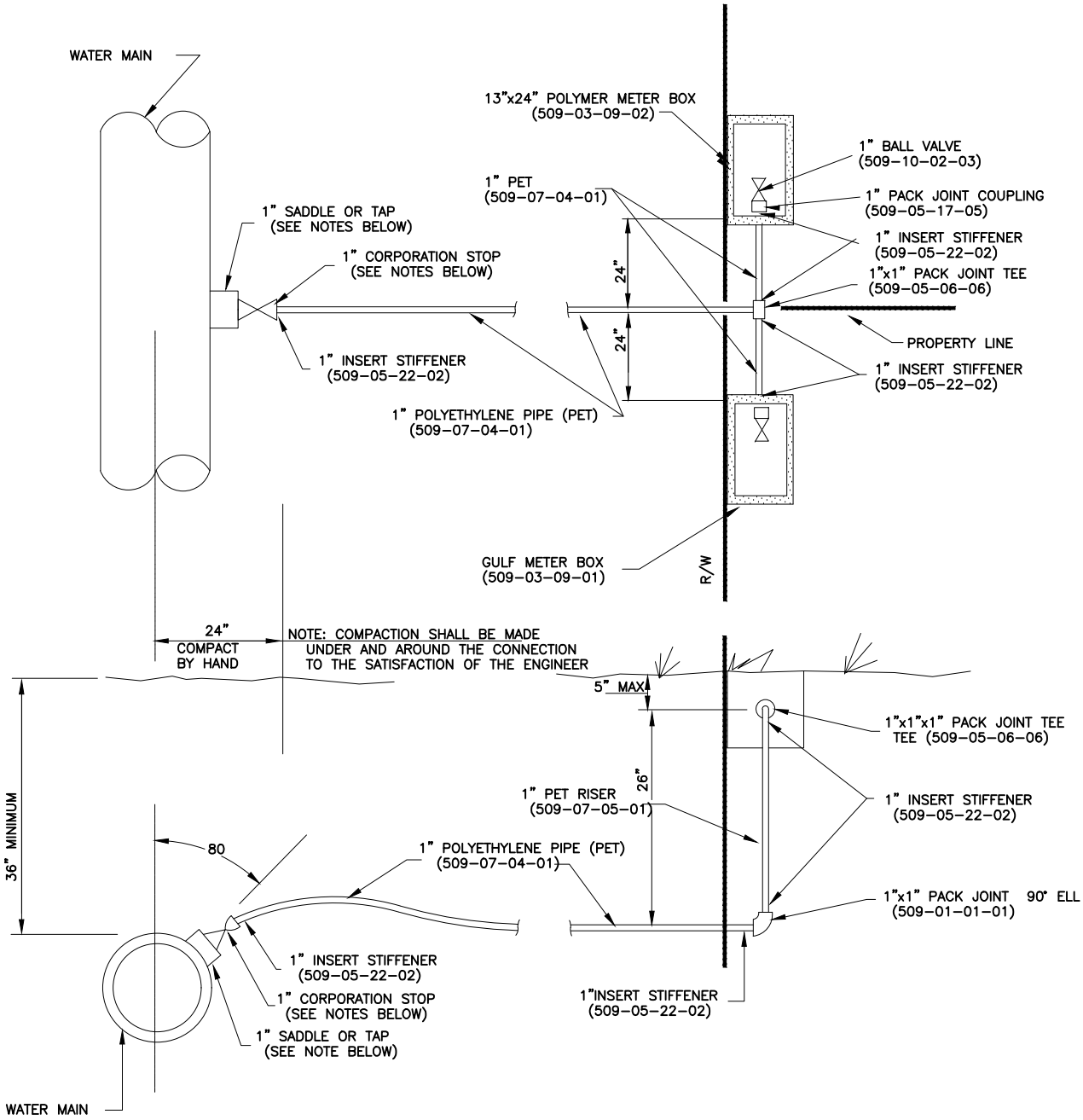

NOTES

1. METER BOXES SET IN PAVEMENT SHALL BE POLYMERE CONCRETE (509-03-09-02) WITH COVER AND METER READERS LID.
2. WATER SERVICE TO BE INSTALLED WITH SOLID COPPER LOCATING WIRE. SEE STANDARD DETAIL 478-7.1 FOR LOCATING WIRE INSTALLATION.
3. ON NEW 2" PVC WATER MAINS, A 2" X 1" TAPPING SADDLE (509-09-02-01) AND A 1" CORPORATION STOP (509-10-02-01) SHALL BE USED WHEN INSTALLING SERVICE CONNECTIONS.
4. ON EXISTING 2" GALVANIZED WATER MAINS, A SERVICE CLAMP (509-09-02-01) AND 1" CORPORATION STOP (509-10-02-02) SHALL BE USED WHEN INSTALLING SERVICE CONNECTIONS.
5. ON NEW OR EXISTING WATER MAINS WITH A DIAMETER LARGER THAN 2", A 1" TAP SHALL BE MADE INTO THE MAIN AND A 1" CORPORATION STOP (509-10-02-02) SHALL BE USED WHEN INSTALLING SERVICE CONNECTIONS.
6. LONG SERVICES UNDER PAVEMENT REQUIRE 2" CASING OF PVC, HDPE OR STEEL.

DATE REVISED: *AUGUST 14, 2012*			SECTION 508-2.1
Water & Sewer Department Utilities Division (352) 351-6772	CITY OF OCALA STANDARD DETAIL	WATER SERVICE DOUBLE 1" WATER SERVICE RESIDENTIAL INSTALLATION	D SHT 1 OF 1

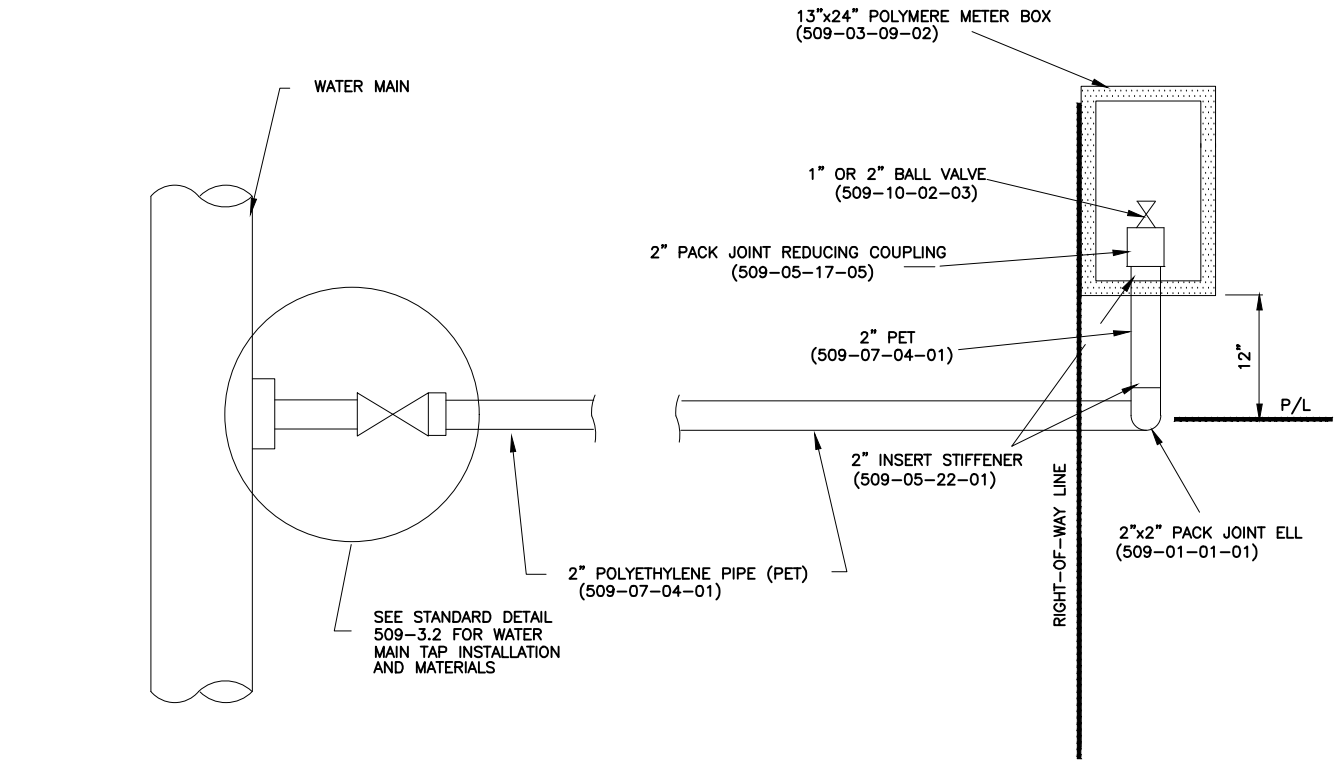

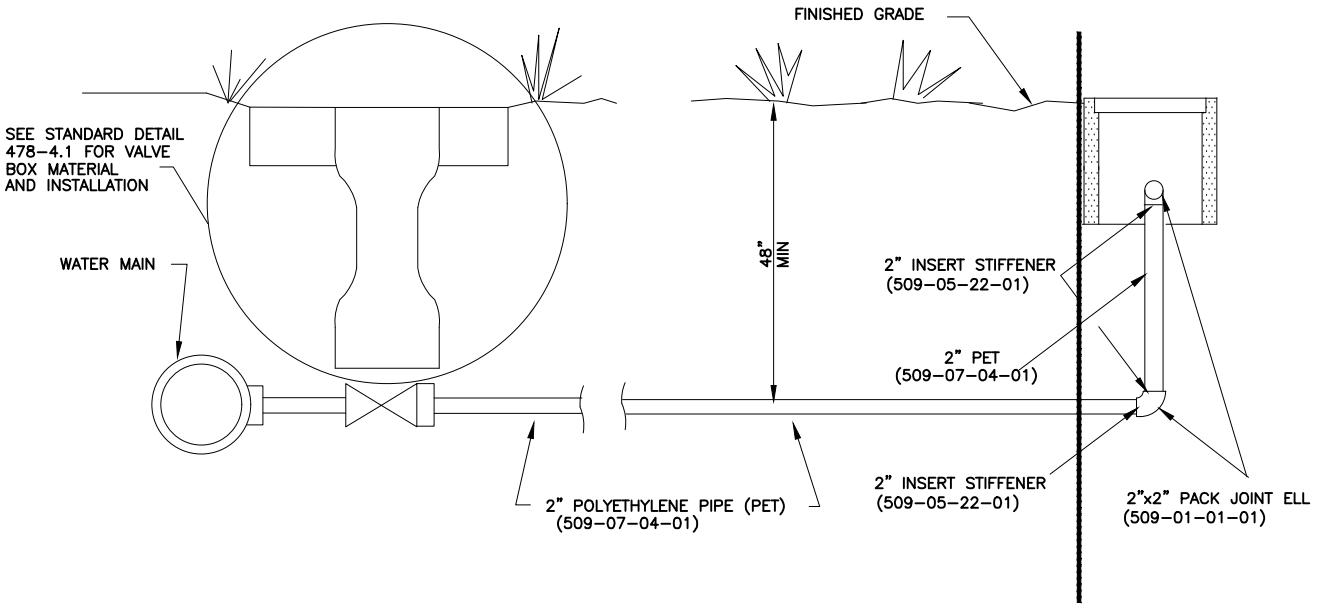

NOTES

1. WATER SERVICE TO BE INSTALLED WITH A SOLID COPPER LOCATING WIRE SEE STANDARD DETAIL 478-7.1 FOR LOCATING WIRE INSTALLATION.
2. LONG SERVICES UNDER PAVEMENT REQUIRE 4" CASING OF PVC, HDPE OR STEEL.

DATE REVISED: *AUGUST 14, 2012*			SECTION 508-2.1
Water & Sewer Department Utilities Division (352) 351-6772	CITY OF OCALA STANDARD DETAIL	SINGLE WATER SERVICE SINGLE WATER SERVICE COMMERCIAL INSTALLATION	E SHT 1 OF 1

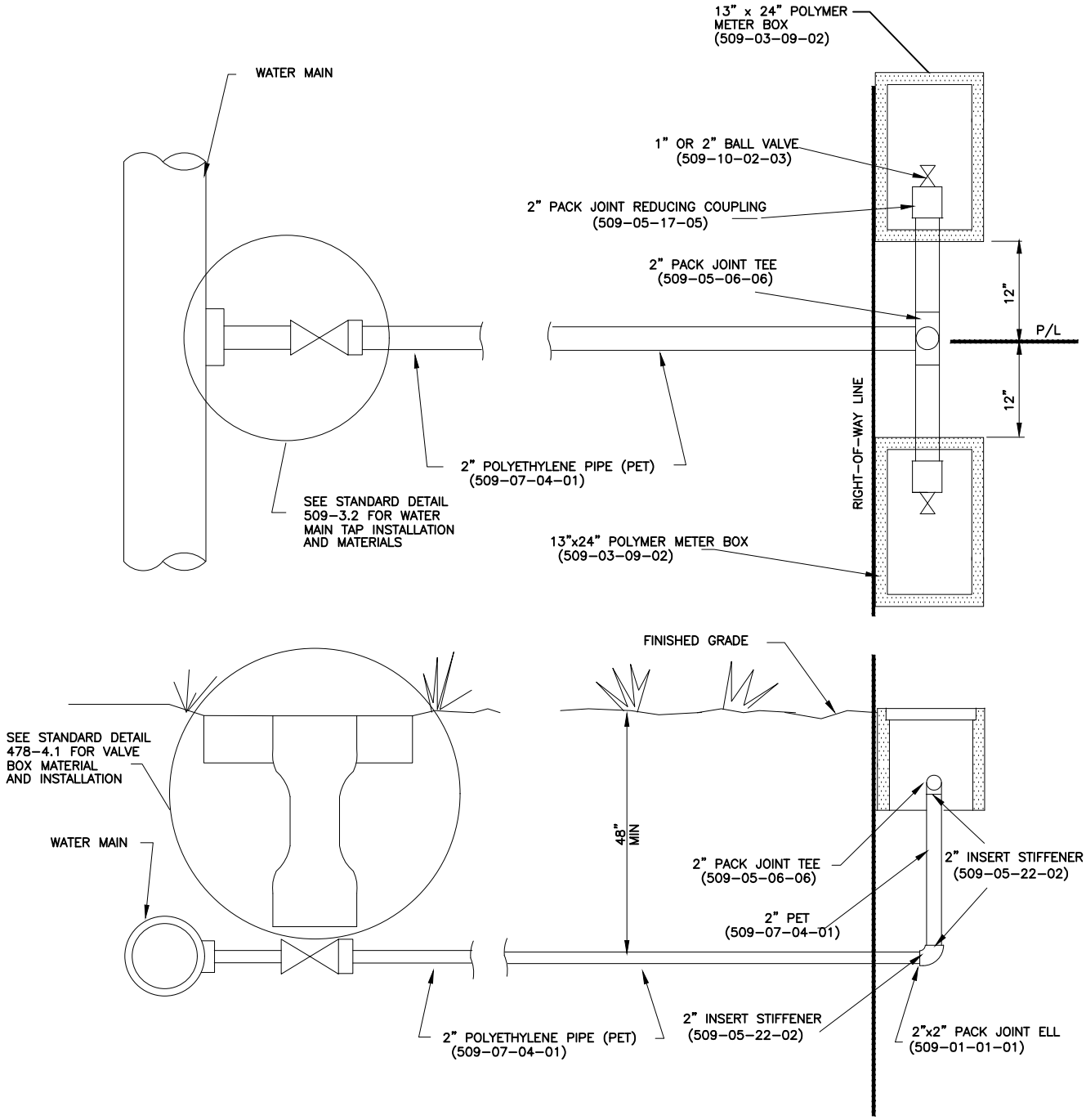

NOTES

1. WATER SERVICE TO BE INSTALLED WITH A SOLID COPPER LOCATING WIRE SEE STANDARD DETAIL 478-7.1 FOR LOCATING WIRE INSTALLATION.
2. LONG SERVICES UNDER PAVEMENT REQUIRE 4" CASING OF PVC, HDPE OR STEEL.

DATE REVISED: *AUGUST 14, 2012*			SECTION 508-2.1
Water & Sewer Department Utilities Division (352) 351-6772	CITY OF OCALA STANDARD DETAIL	WATER SERVICE DOUBLE 1" WATER SERVICE COMMERCIAL INSTALLATION	F SHT 1 OF 1

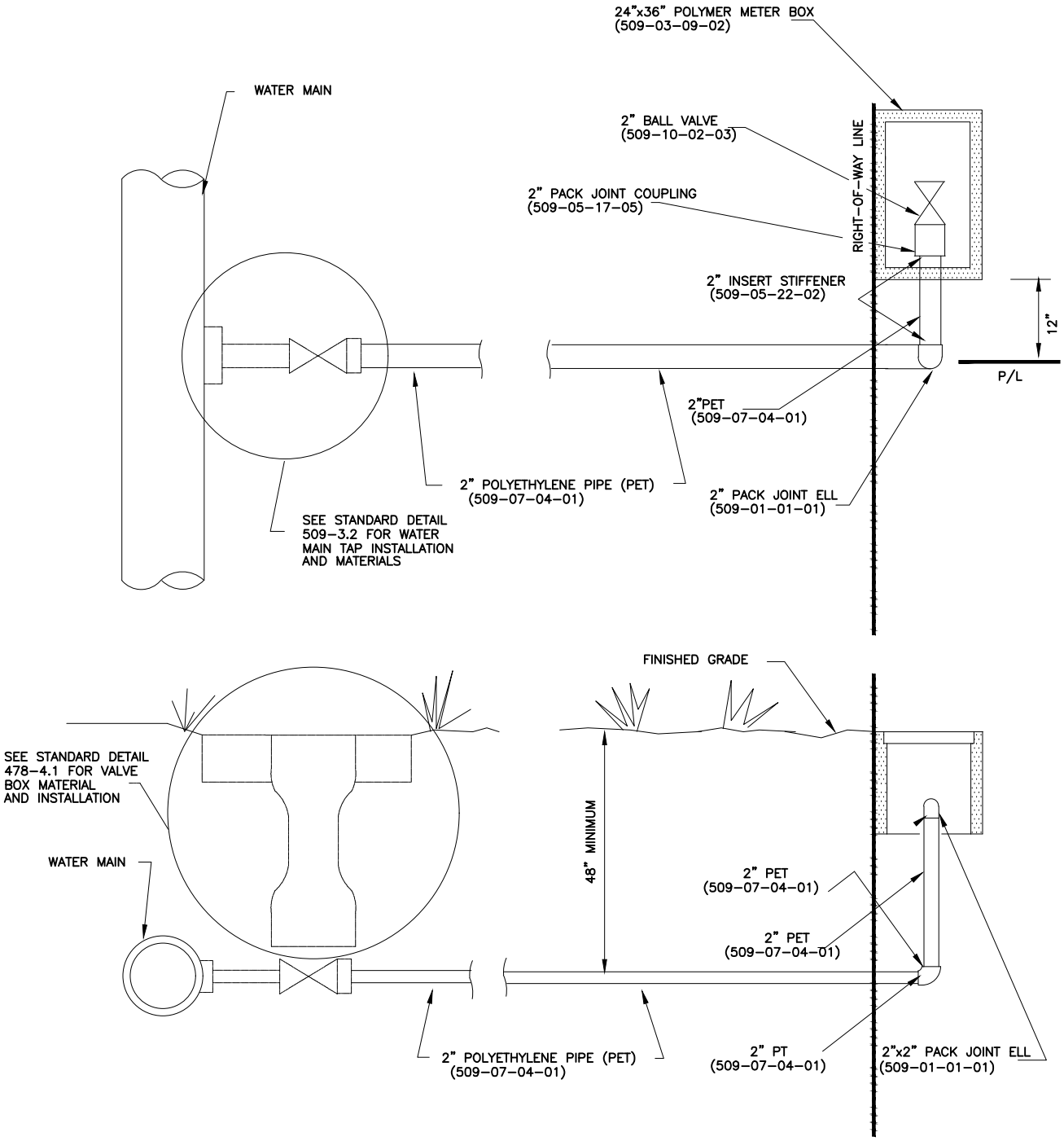

NOTES

1. WATER SERVICE TO BE INSTALLED WITH A SOLID COPPER LOCATING WIRE SEE STANDARD DETAIL 478-7.1 FOR LOCATING WIRE INSTALLATION.
2. LONG SERVICES UNDER PAVEMENT REQUIRE 4" CASING OF PVC, HDPE OR STEEL.

DATE REVISED: *AUGUST 14, 2012*			SECTION 508-2.1
Water & Sewer Department Utilities Division (352) 351-6772	CITY OF OCALA STANDARD DETAIL	WATER SERVICE SINGLE 1-1/2" & 2" WATER SERVICE	G SHT 1 OF 1

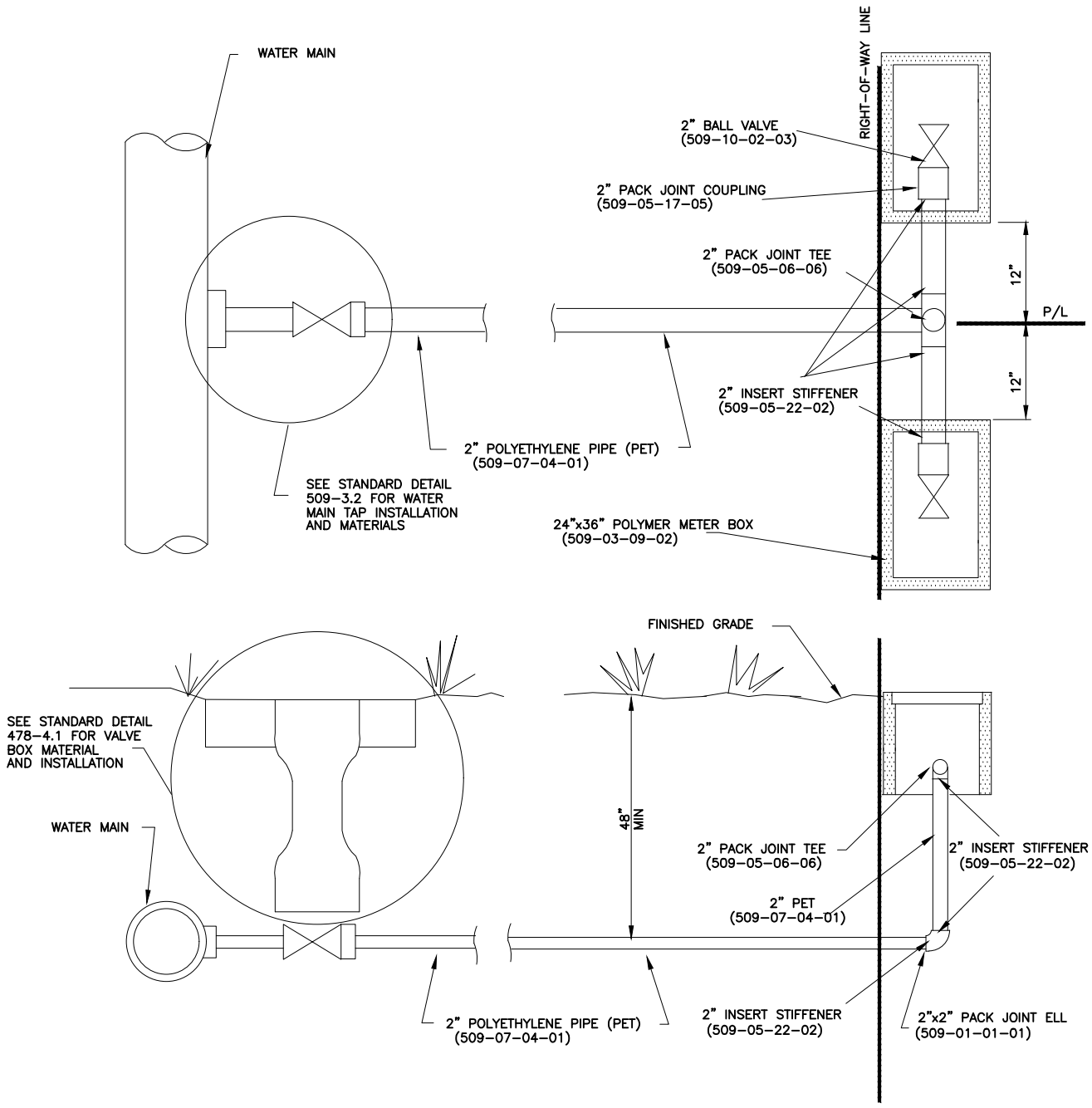

NOTES

1. WATER SERVICE TO BE INSTALLED WITH A SOLID COPPER LOCATING WIRE SEE STANDARD DETAIL 478-7.1 FOR LOCATING WIRE INSTALLATION.
2. LONG SERVICES UNDER PAVEMENT REQUIRE 4" CASING OF PVC, HDPE OR STEEL.

DATE REVISED: *AUGUST 14, 2012*			SECTION 508-2.1
Water & Sewer Department Utilities Division (352) 351-6772	CITY OF OCALA STANDARD DETAIL	WATER SERVICE DOUBLE 1-1/2" & 2" WATER SERVICE	H SHT 1 OF 1

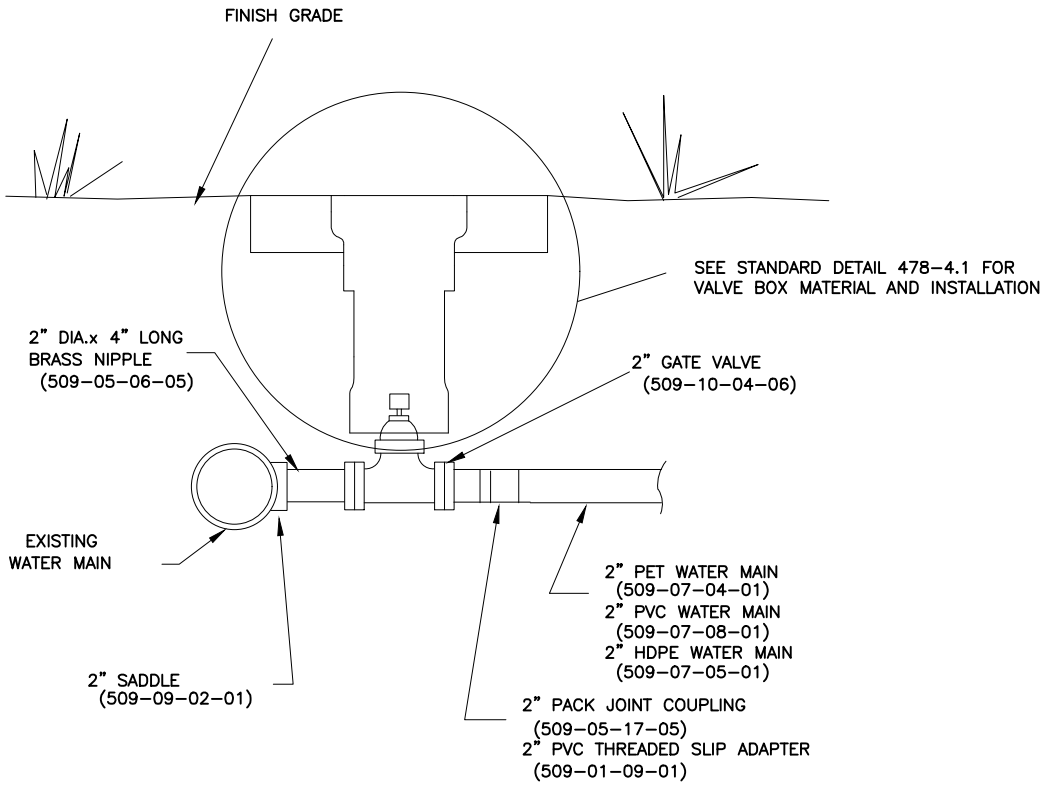

NOTES

1. PRESSURE TEST ALL SADDLES & VALVES PRIOR TO TAPPING.
2. TEST AT 150 PSI, 10-15 MINUTES.

DATE REVISED: *DECEMBER 19, 2012*			SECTION 508-3.2
Water & Sewer Department Utilities Division (352) 351-6772	CITY OF OCALA STANDARD DETAIL	WATER MAIN TAP 2" PVC/PET TO EXISTING MAIN	A SHT 1 OF 1

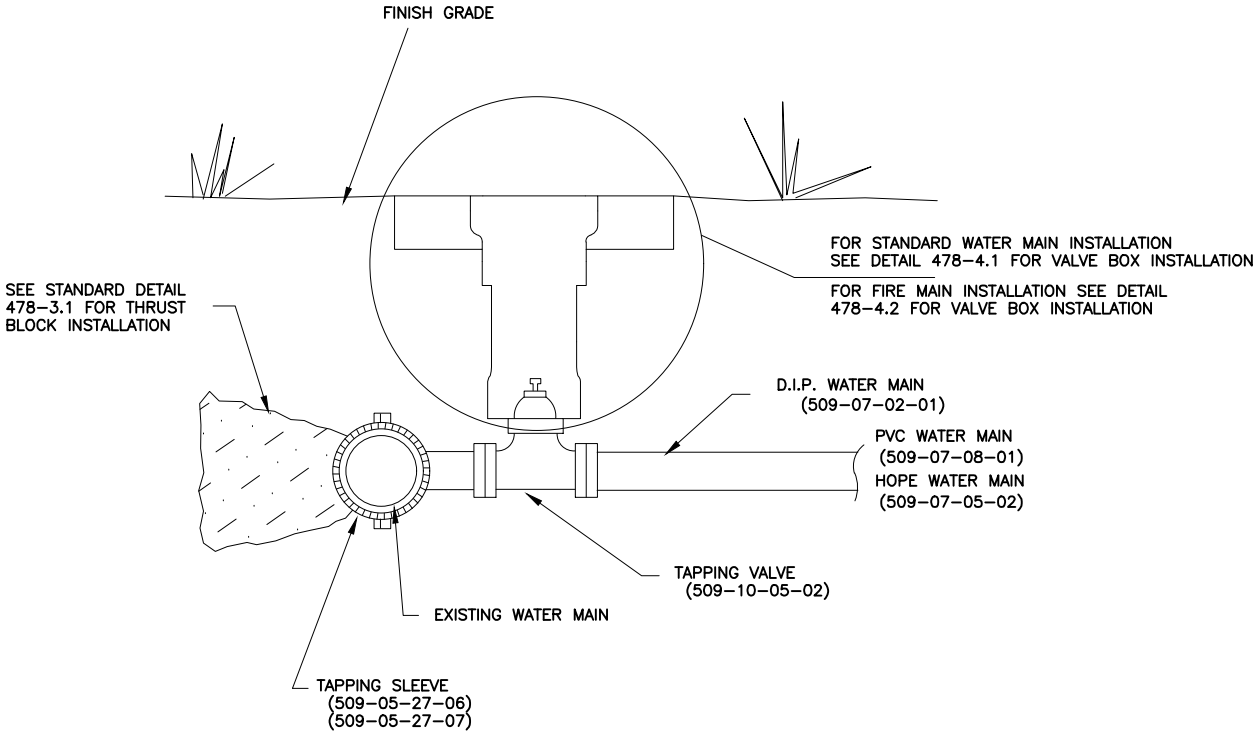

NOTES

1. PRESSURE TEST ALL SADDLES AND VALVES PRIOR TO WET TAP.
2. PRESSURE TEST AT 150 PSI, 10-15 MINUTES.

DATE REVISED: *AUGUST 14, 2012*			SECTION 508-3.2
Water & Sewer Department Utilities Division (352) 351-6772	CITY OF OCALA STANDARD DETAIL	WATER MAIN TAP 3" AND ABOVE	B SHT 1 OF 1

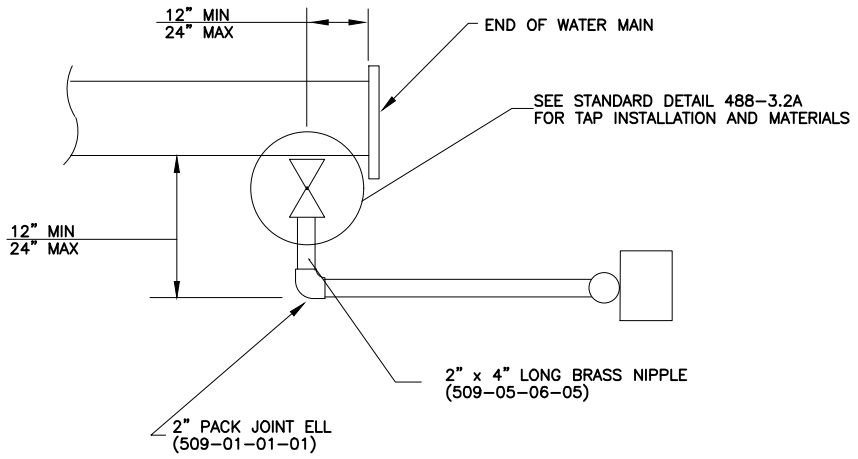

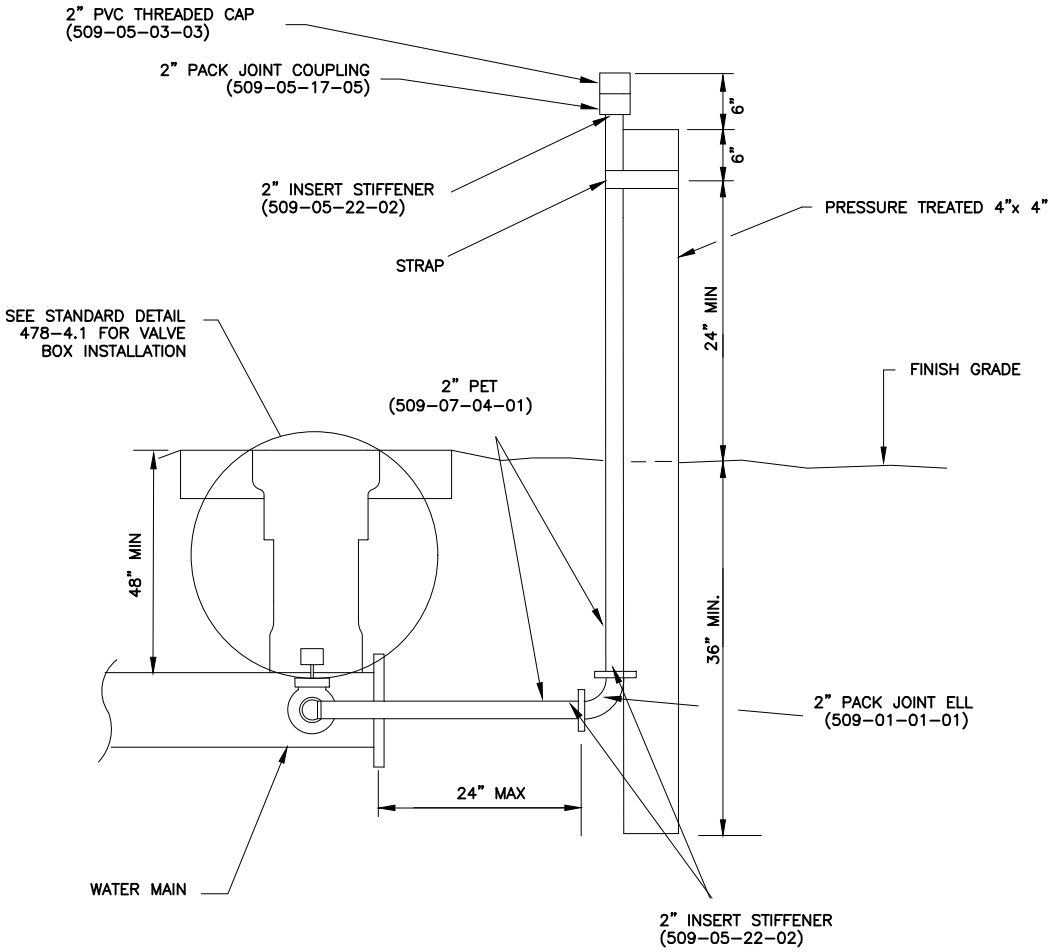

DATE REVISED: *AUGUST 14, 2012*			SECTION 508-3.3
Water & Sewer Department Utilities Division (352) 351-6772	CITY OF OCALA STANDARD DETAIL	TEMPORARY BLOWOFF ASSEMBLY	A SHT 1 OF 1

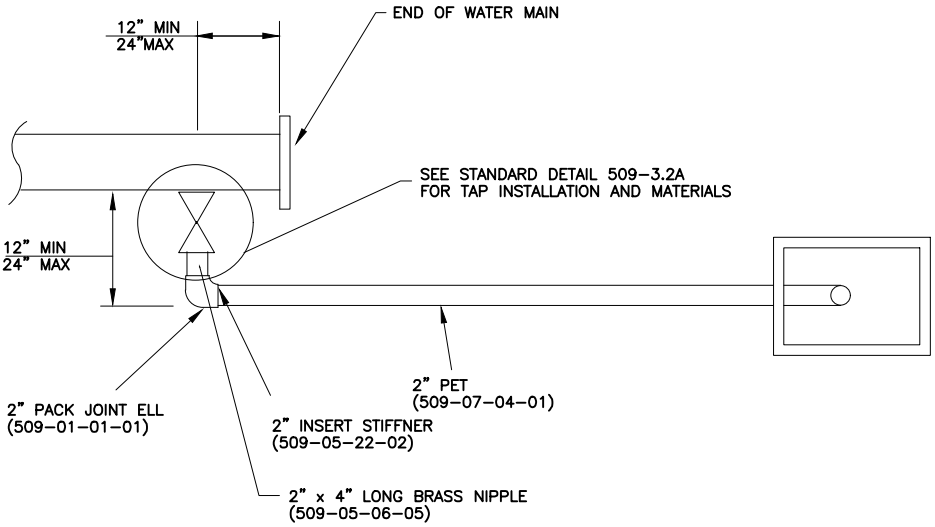

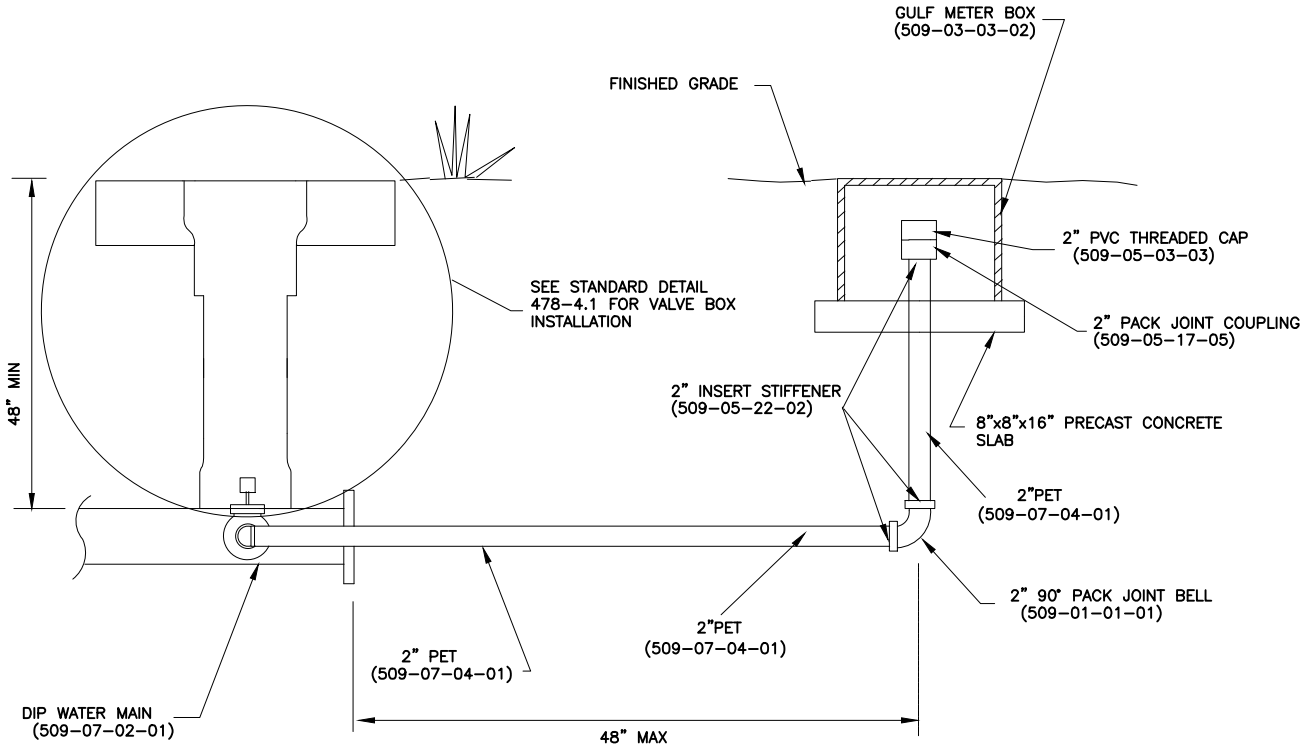

DATE REVISED: *AUGUST 14, 2012*			SECTION 508-3.3
Water & Sewer Department Utilities Division (352) 351-6772	CITY OF OCALA STANDARD DETAIL	PERMANENT BLOWOFF ASSEMBLY	B SHT 1 OF 1

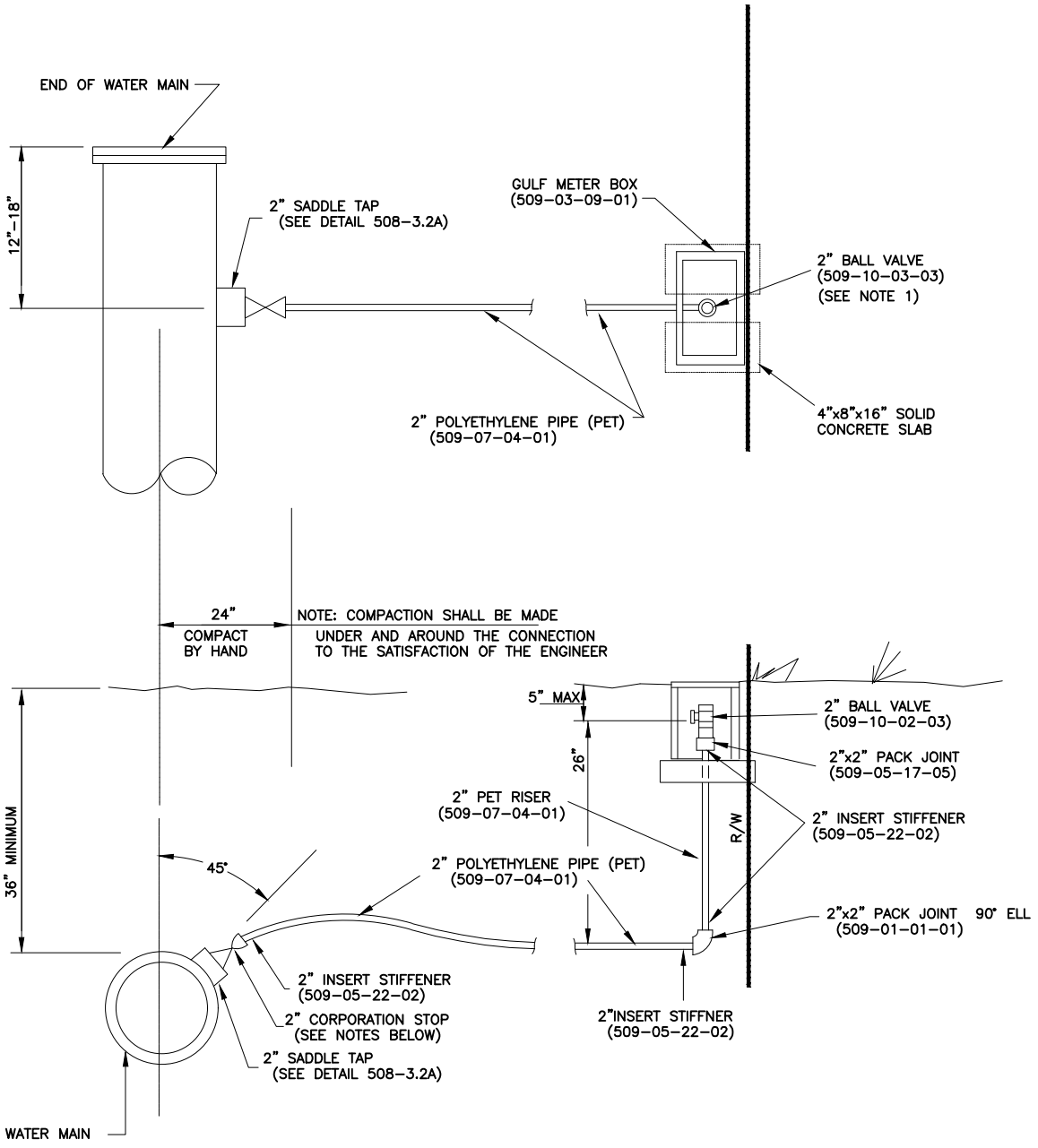

NOTES

1. BALL TO BE FURNISHED WITH LOCKING DEVICE.
2. POLYETHYLENE PIPE TO BE INSTALLED WITH SOLID COPPER LOCATING WIRE.
3. ON NEW 2" PVC WATER MAINS, A 2" x 2" TAPPING SADDLE (509-05-02-01) , 2" POLYETHYLENE PIPE, 2" CORPORATION STOP (509-10-02-01), AND 2" BALL VALVE SHALL BE USED WHEN INSTALLING BLOWOFF ASSEMBLY.
4. ON NEW OR EXISTING WATER MAINS WITH A DIAMETER LARGER THAN 2", A 2" TAP SHALL BE MADE INTO THE MAIN AND A 2" CORPORATION STOPS (509-10-02-02) SHALL BE USED WHEN INSTALLING BLOWOFF ASSEMBLY.

DATE REVISED: *AUGUST 14, 2012*			SECTION 508-3.3
Water & Sewer Department Utilities Division (352) 351-6772	CITY OF OCALA STANDARD DETAIL	CONSTRUCTION BLOWOFF ASSEMBLY	C SHT 1 OF 1